REVISIONS				
REV	DESCRIPTION	E.C.N.	DATE	BY/APP'D
A	RELEASE TO DOCUMENT CONTROL	924	03/14/2003	MS/RW
B	ADD 5X5mm PAD TO LAND PATTERN	2156	08/23/2006	TL/RW

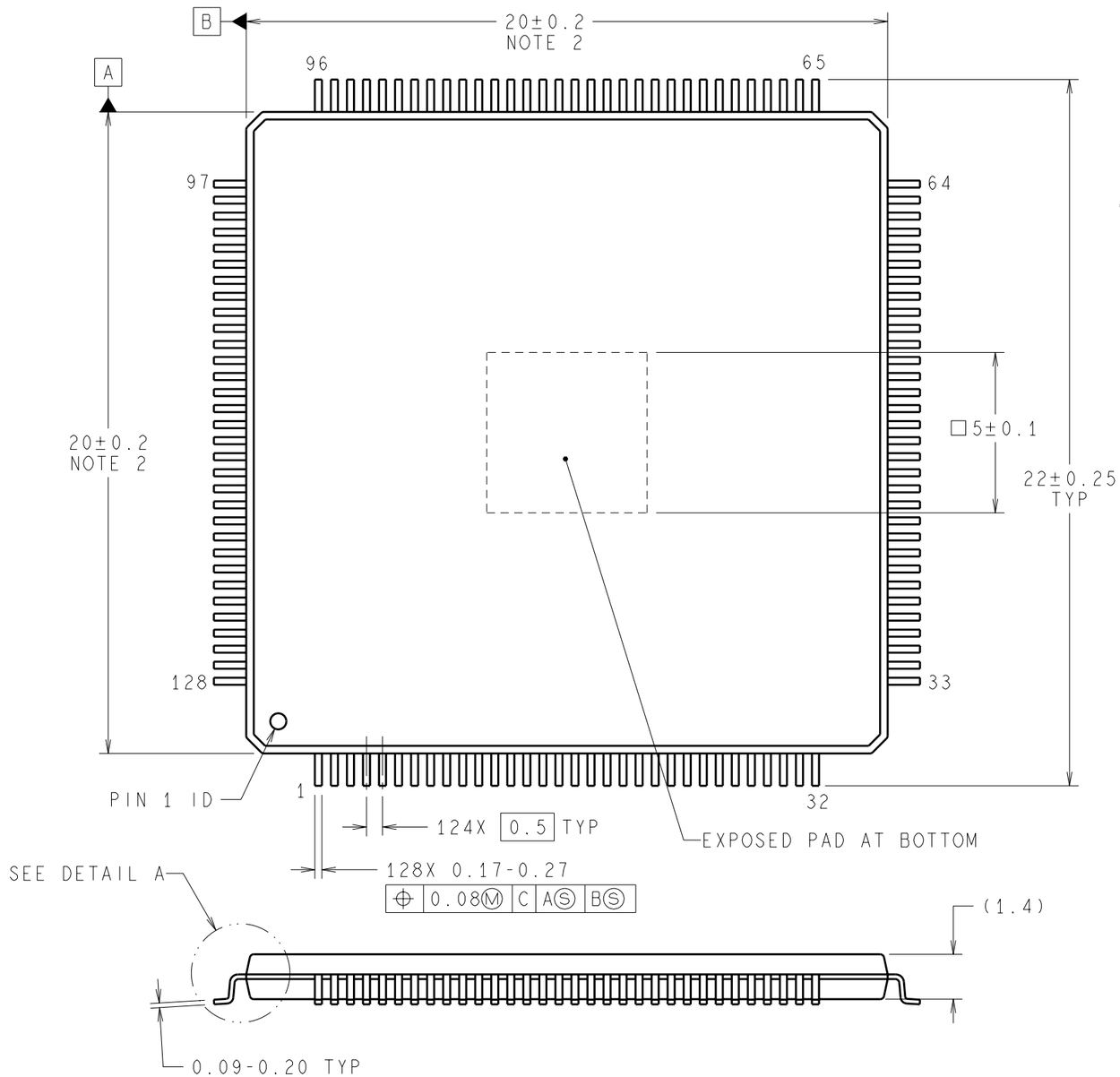

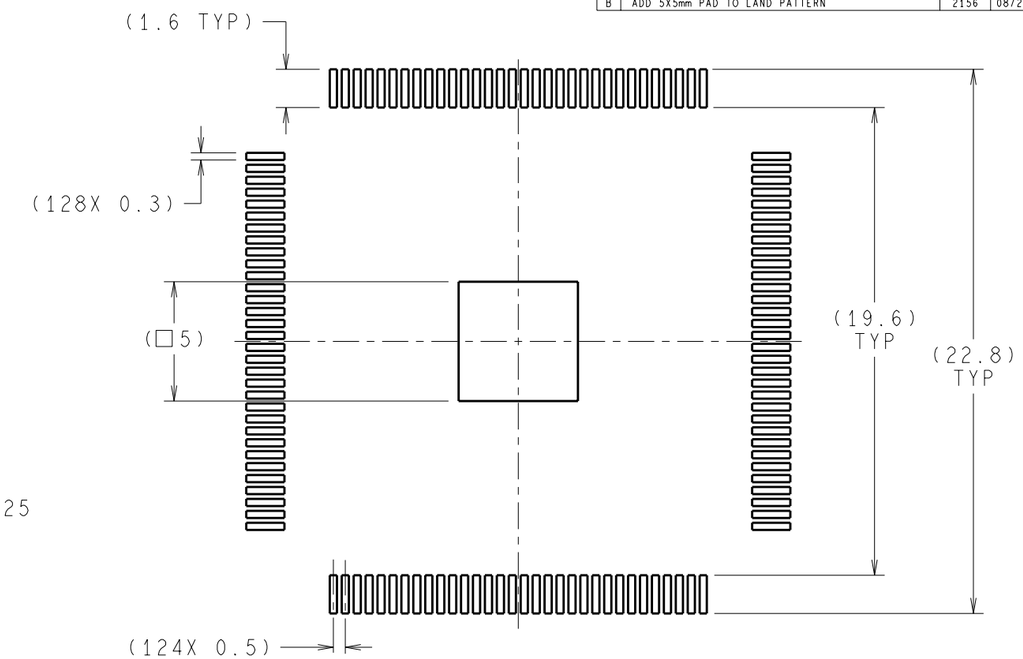

RECOMMENDED LAND PATTERN

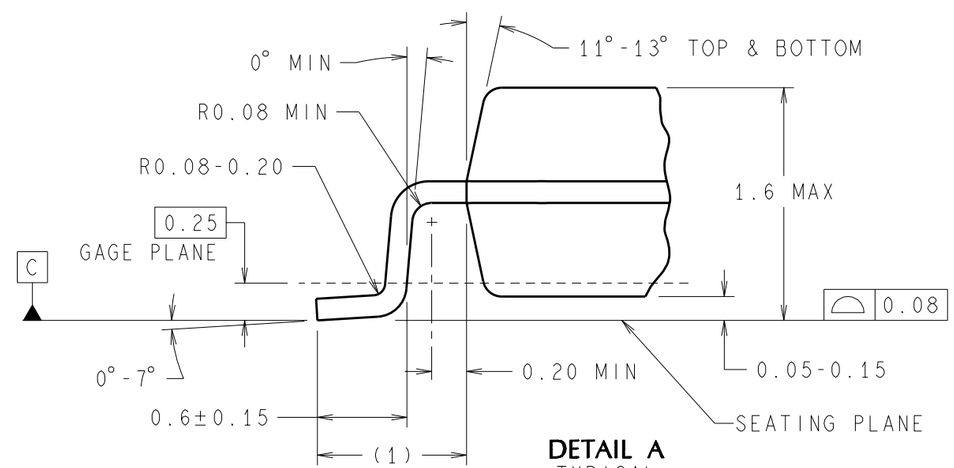

DETAIL A
TYPICAL

DIMENSIONS ARE IN MILLIMETERS

NOTES: UNLESS OTHERWISE SPECIFIED

1. FOR LEAD FINISH THICKNESS AND COMPOSITION, SEE "SOLDER INFORMATION" IN THE PACKAGING SECTION OF THE NATIONAL SEMICONDUCTOR WEB PAGE (www.national.com).
2. DIMENSION DOES NOT INCLUDE MOLD PROTRUSION. MAXIMUM ALLOWABLE MOLD PROTRUSION 0.25mm PER SIDE.
3. REFERENCE JEDEC REGISTRATION MS-026, VARIATION BFB.

APPROVALS	DATE
DRAWN MARTA SUCHY	03/14/2003
DFTG. CHK. MARTA SUCHY	08/23/2006
ENGR. CHK. RANDY WALBERG	08/23/2006

PROJECTION MM

National Semiconductor
2900 Semiconductor Dr., Santa Clara, CA 95052-8090

LQFP,
20x20x1.4mm, 128 LD,
0.5mm PITCH, EXPOSED PAD

SCALE	SIZE	DRAWING NUMBER	REV
NTS	B	(SC)MKT-VNX128A	B

FORMERLY: N/A

SHEET 1 of 1