REVISIONS				
REV	DESCRIPTION	E.C.N.	DATE	BY/APP'D
A	RELEASE TO DOCUMENT CONTROL	2265	03/28/2007	MS/RW

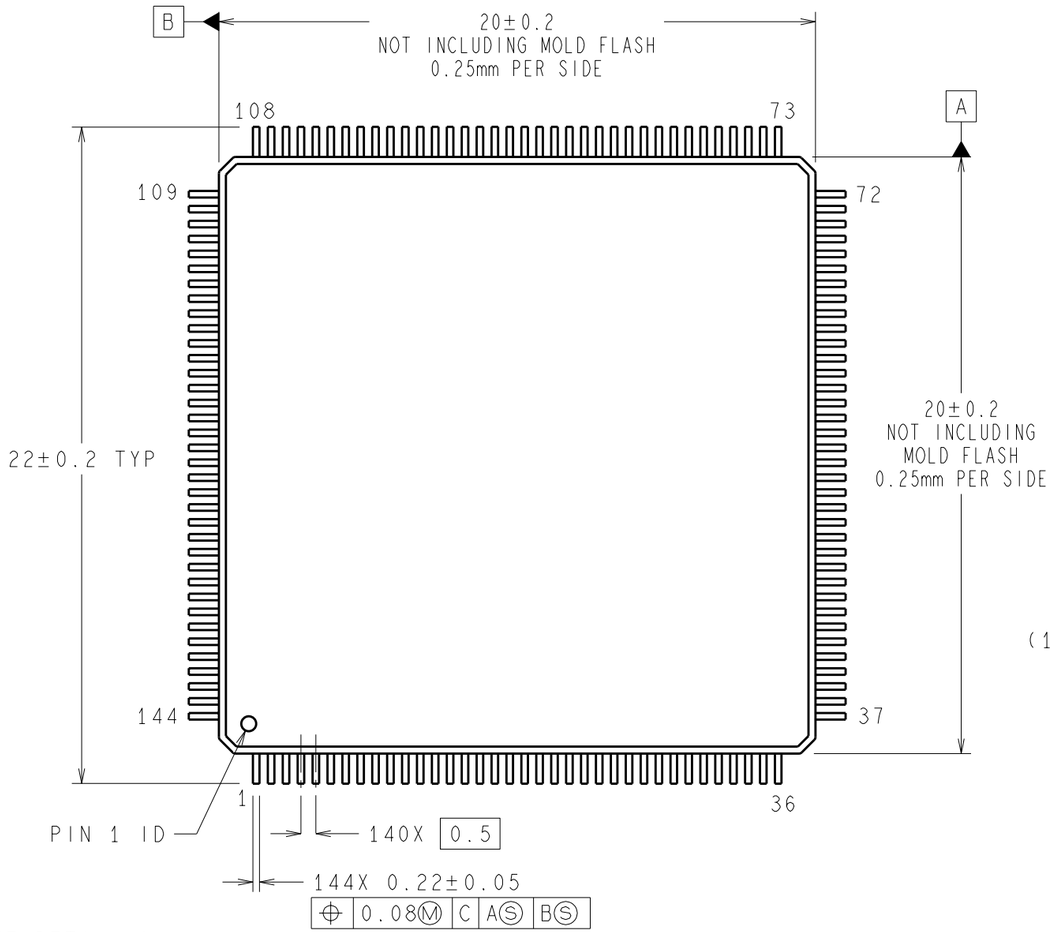

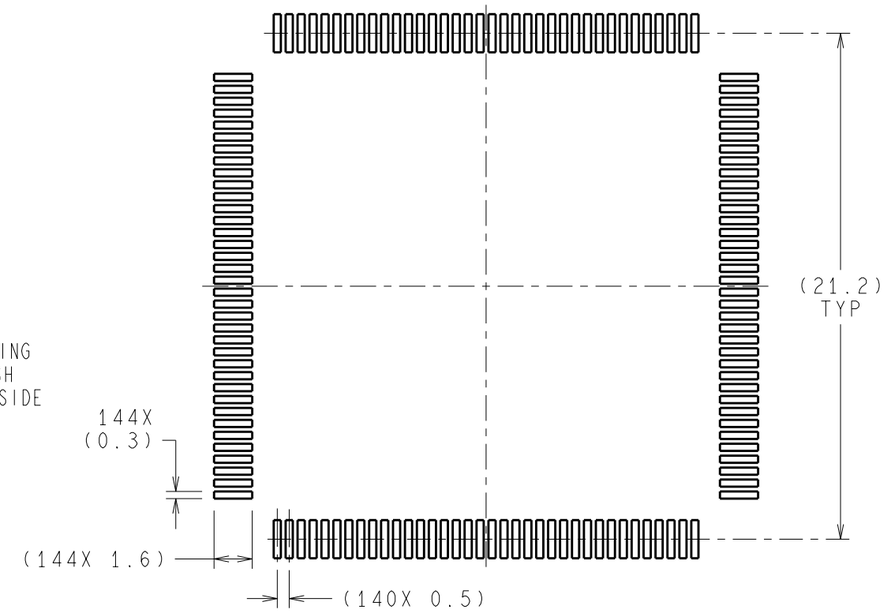

RECOMMENDED LAND PATTERN

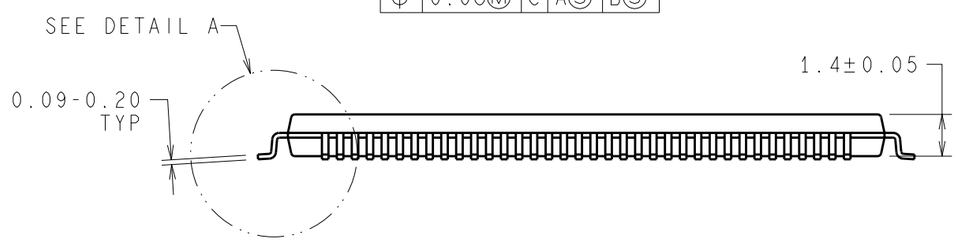

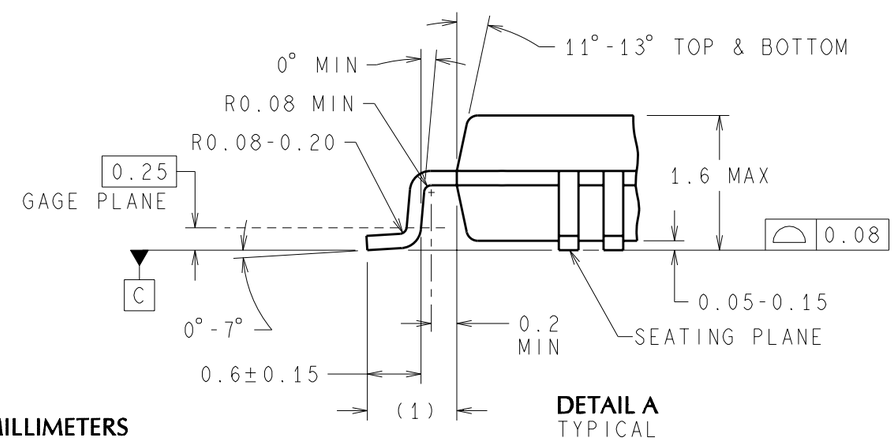

DETAIL A
TYPICAL

DIMENSIONS ARE IN MILLIMETERS

NOTES: UNLESS OTHERWISE SPECIFIED

1. FOR LEAD FINISH THICKNESS AND COMPOSITION, SEE "SOLDER INFORMATION" IN THE PACKAGING SECTION OF THE NATIONAL SEMICONDUCTOR WEB PAGE (www.national.com).

2. REFERENCE JEDEC REGISTRATION MS-026, VARIATION BFB.

APPROVALS	DATE
DRAWN MARTA SUCHY	03/28/2007
DFTG. CHK. THANH LEQUANG	03/28/2007
ENGR. CHK. RANDY WALBERG	03/28/2007

PROJECTION MM

National Semiconductor
2900 Semiconductor Dr, Santa Clara, CA 95052-8090

LQFP, 20x20x1.4mm,
144 LEAD, 0.5mm PITCH

SCALE	SIZE	DRAWING NUMBER	REV
NTS	B	(SC)MKT-VNG144C	A

FORMERLY: y

SHEET 1 of 1