REVISIONS				
REV	DESCRIPTION	E.C.N.	DATE	BY/APP'D
A	RELEASE TO DOCUMENT CONTROL	1745	02/28/2005	AS/MS/SN

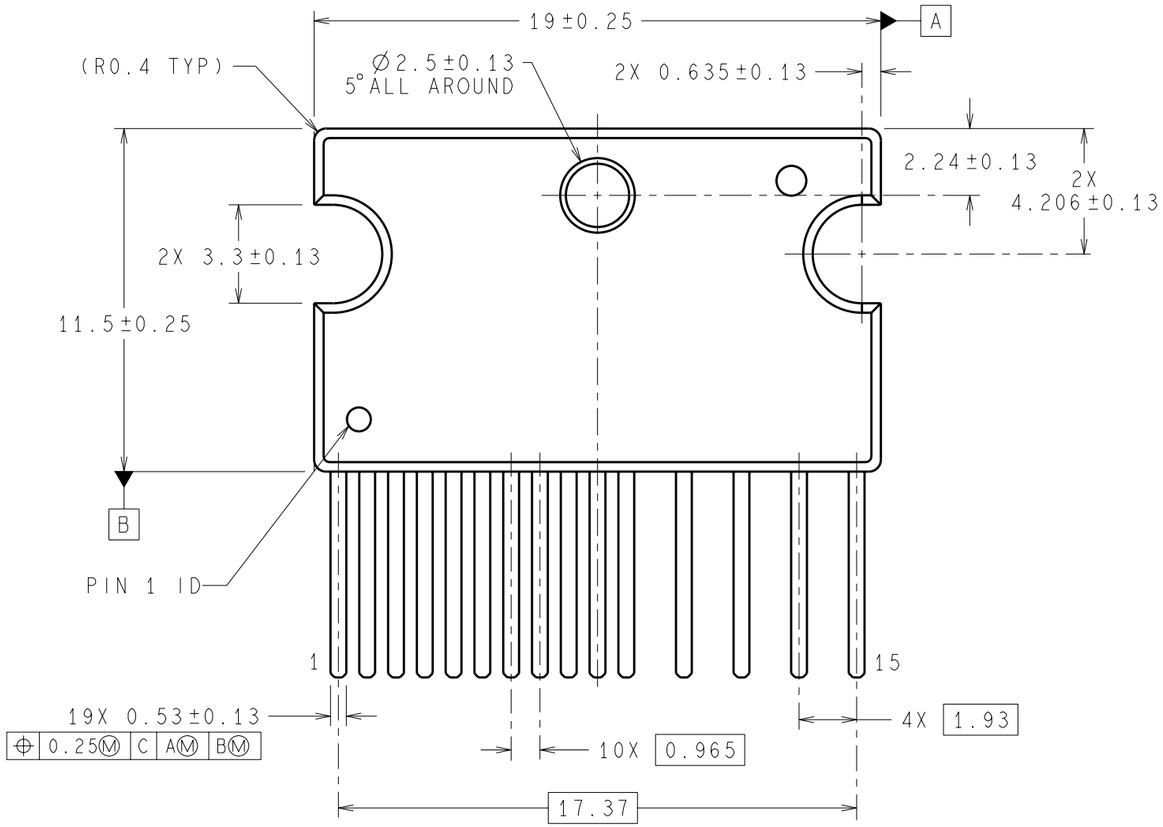

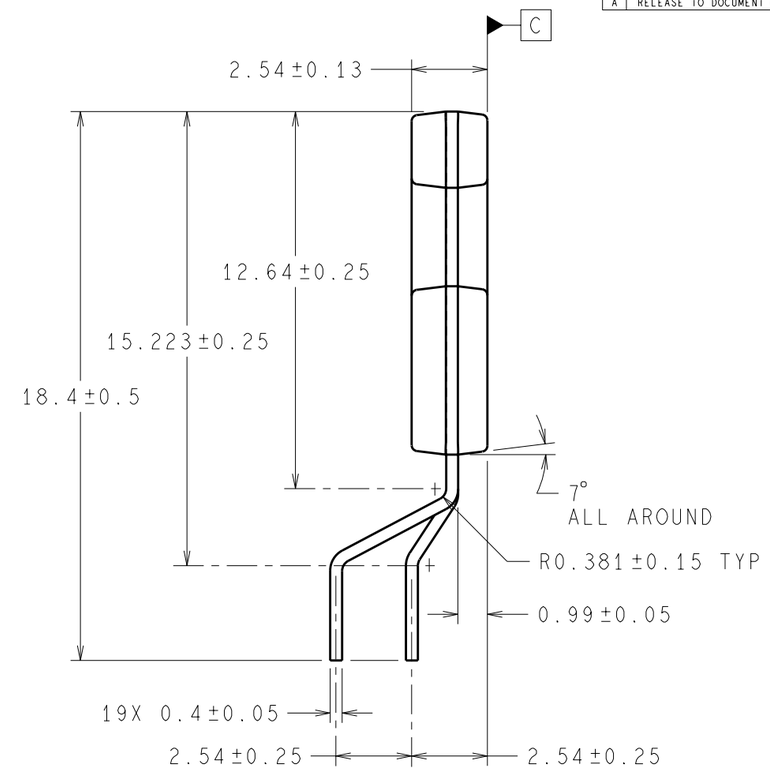

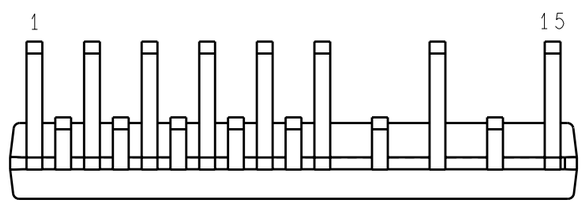

DIMENSIONS ARE IN MILIMETERS
DIMENSIONS IN () FOR REFERENCE ONLY

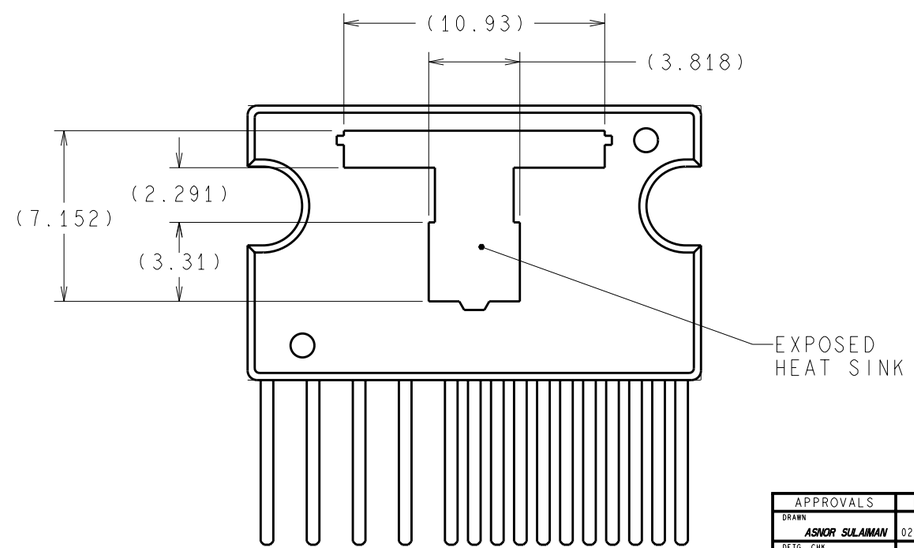

BACK VIEW

NOTES: UNLESS OTHERWISE SPECIFIED

1. FOR LEAD FINISH THICKNESS AND COMPOSITION, SEE "SOLDER INFORMATION" IN THE PACKAGING SECTION OF THE NATIONAL SEMICONDUCTOR WEB PAGE (www.national.com).
2. NO JEDEC REGRISTRATION AS OF FEBRUARY 2005.

APPROVALS	DATE
DRAWN ASNOR SULAIMAN	02/28/2005
DFTG. CHK. MARTA SUCHY	02/28/2005
ENGR. CHK. N.SANTHIRAN	02/28/2005

PROJECTION MM

National Semiconductor
2900 Semiconductor Dr, Santa Clara, CA 95052-8090

TO-247, MOLDED,
19.0x11.5x2.54mm,
15 LEAD, 0.965mm PITCH

SCALE	SIZE	DRAWING NUMBER	REV
NTS	B	(SC)MKT-TB15A	A

FORMERLY: N/A
SHEET 1 of 1