REVISIONS				
REV	DESCRIPTION	E.C.N.	DATE	BY/APP'D
A	RELEASETO DOCUMENT CONTROL	2456	02/08/2008	TL/JL
B	ADD MISSING RING AROUND H/S AT BOTTOM VIEW	2491	03/11/2008	TL/JL
C	CORRECT ALPHA PIN ASSIGNMENT (FROM Q-V TO R-Y)	2986	01/22/2010	TL/JL
D	REMOVE NOTE 1; RENUMBER NOTES	3014	02/10/2010	TL/JL

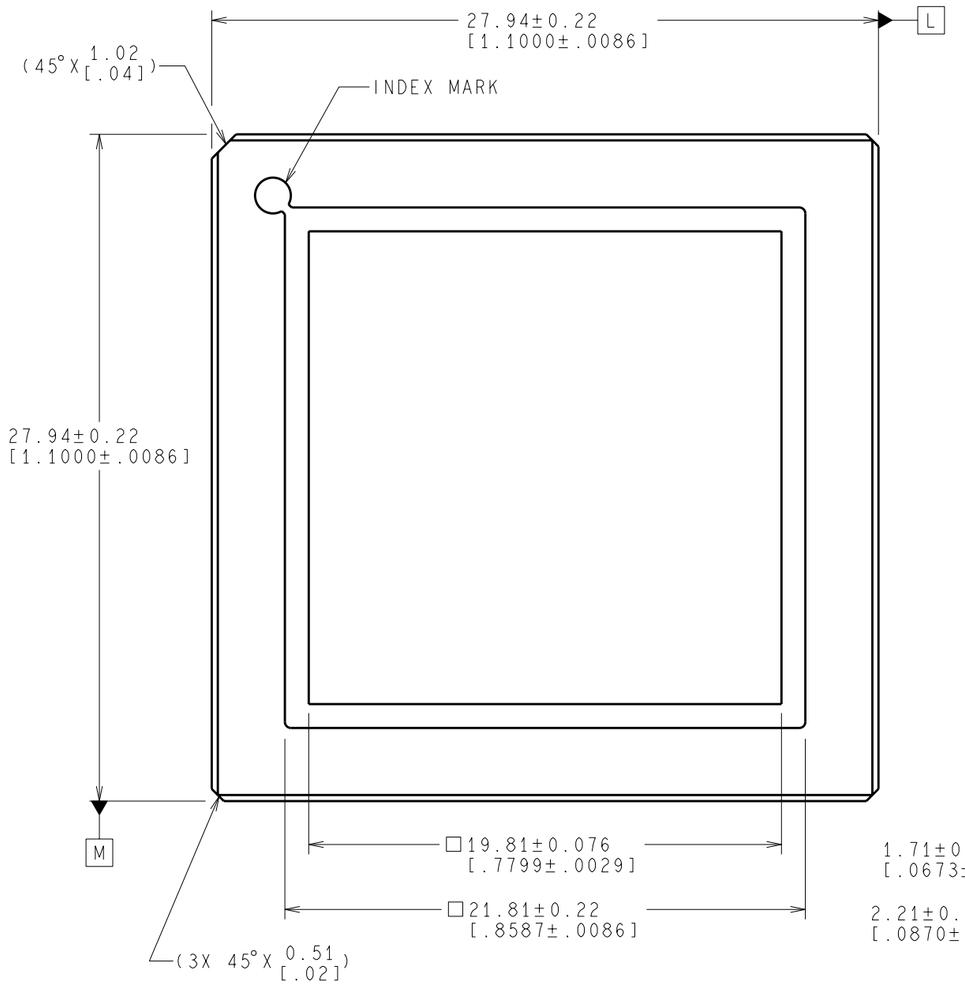

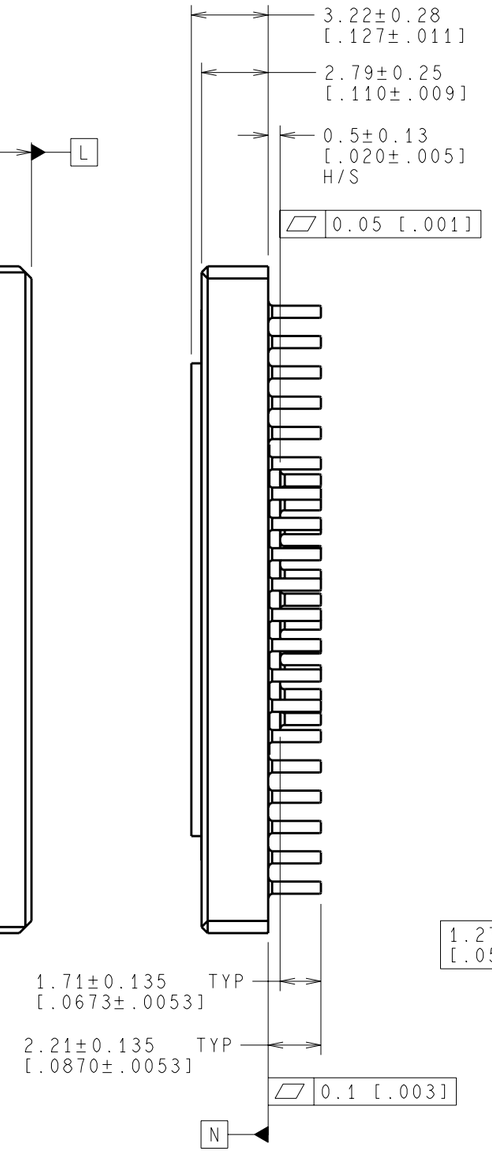

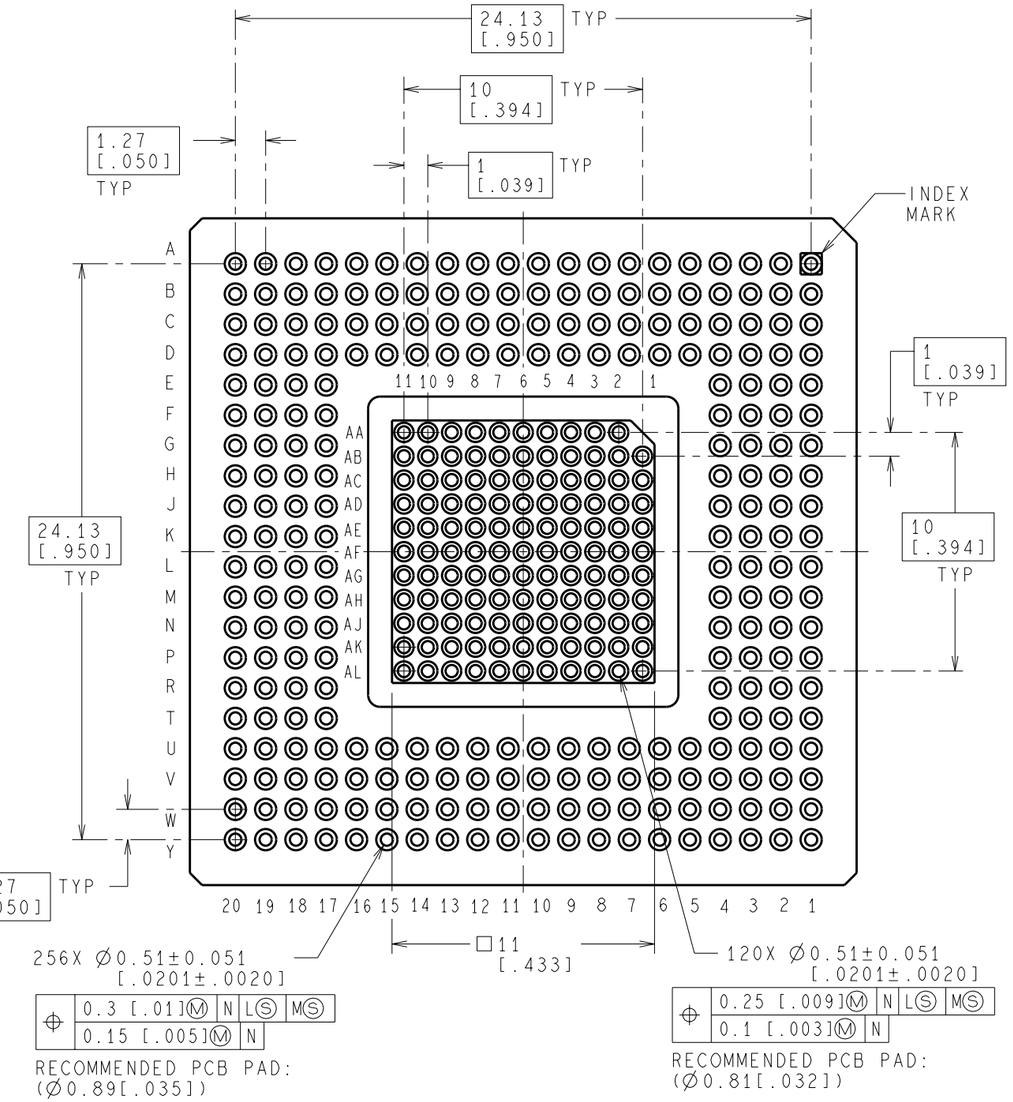

NOTES: UNLESS OTHERWISE SPECIFIED

1. CENTER COLUMNS ARE GROUND/HEAT TRANSFER PINS.
2. NO JEDEC REGISTRATION AS OF FEBRUARY 2010.

DIMENSIONS ARE IN MILLIMETERS
VALUES IN [ ] ARE IN INCHES
DIMENSIONS IN ( ) FOR REFERENCE ONLY

APPROVALS	DATE
DRAWN T. LEQUANG	02/08/2008
DFTG. CHK. KURT SINCERBOX	02/10/2010
ENGR. CHK. JOE LUNDY	02/10/2010

PROJECTION MM (INCH)

National Semiconductor
2900 Semiconductor Dr, Santa Clara, CA 95052-8090

CCGA,
27.94x27.94x2.79, 376 PIN,
1mm & 1.27mm PITCH

SCALE	SIZE	DRAWING NUMBER	REV
NTS	B	(SC)MKT-CCC376A	D

FORMERLY: N/A

SHEET 1 of 1