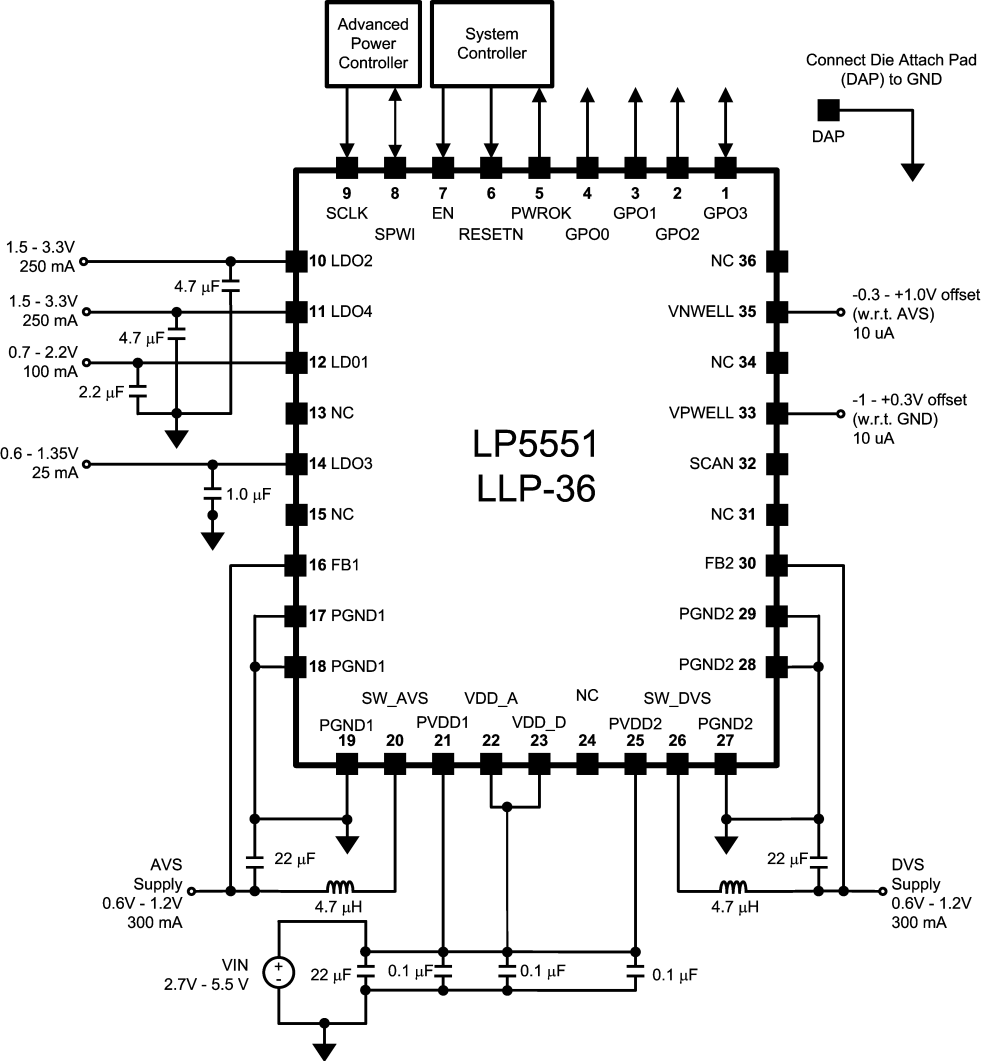
Advanced Power Controller
System Controller
Connect Die Attach Pad (DAP) to GND
DAP
9 SCLK
8 SPWI
7 EN
6 RESETN
5 PWROK
4 GPO0
3 GPO1
2 GPO2
1 GPO3
1.5 - 3.3V 250 mA
4.7 µF
1.5 - 3.3V 250 mA
4.7 µF
0.7 - 2.2V 100 mA
2.2 µF
0.6 - 1.35V 25 mA
1.0 µF
10 LDO2
11 LDO4
12 LD01
13 NC
14 LDO3
15 NC
16 FB1
17 PGND1
18 PGND1
NC 36
VNWELL 35
NC 34
VPWELL 33
SCAN 32
NC 31
FB2 30
PGND2 29
PGND2 28
-0.3 - +1.0V offset (w.r.t. AVS) 10 uA
-1 - +0.3V offset (w.r.t. GND) 10 uA
LP5551
LLP-36
PGND1 19
SW_AVS 20
PVDD1 21
VDD_A 22
VDD_D 23
NC 24
PVDD2 25
SW_DVS 26
PGND2 27
22 µF
AVS Supply 0.6V - 1.2V 300 mA
4.7 µH
22 µF
4.7 µH
DVS Supply 0.6V - 1.2V 300 mA
VIN 2.7V - 5.5 V
22 µF
0.1 µF
0.1 µF
0.1 µF