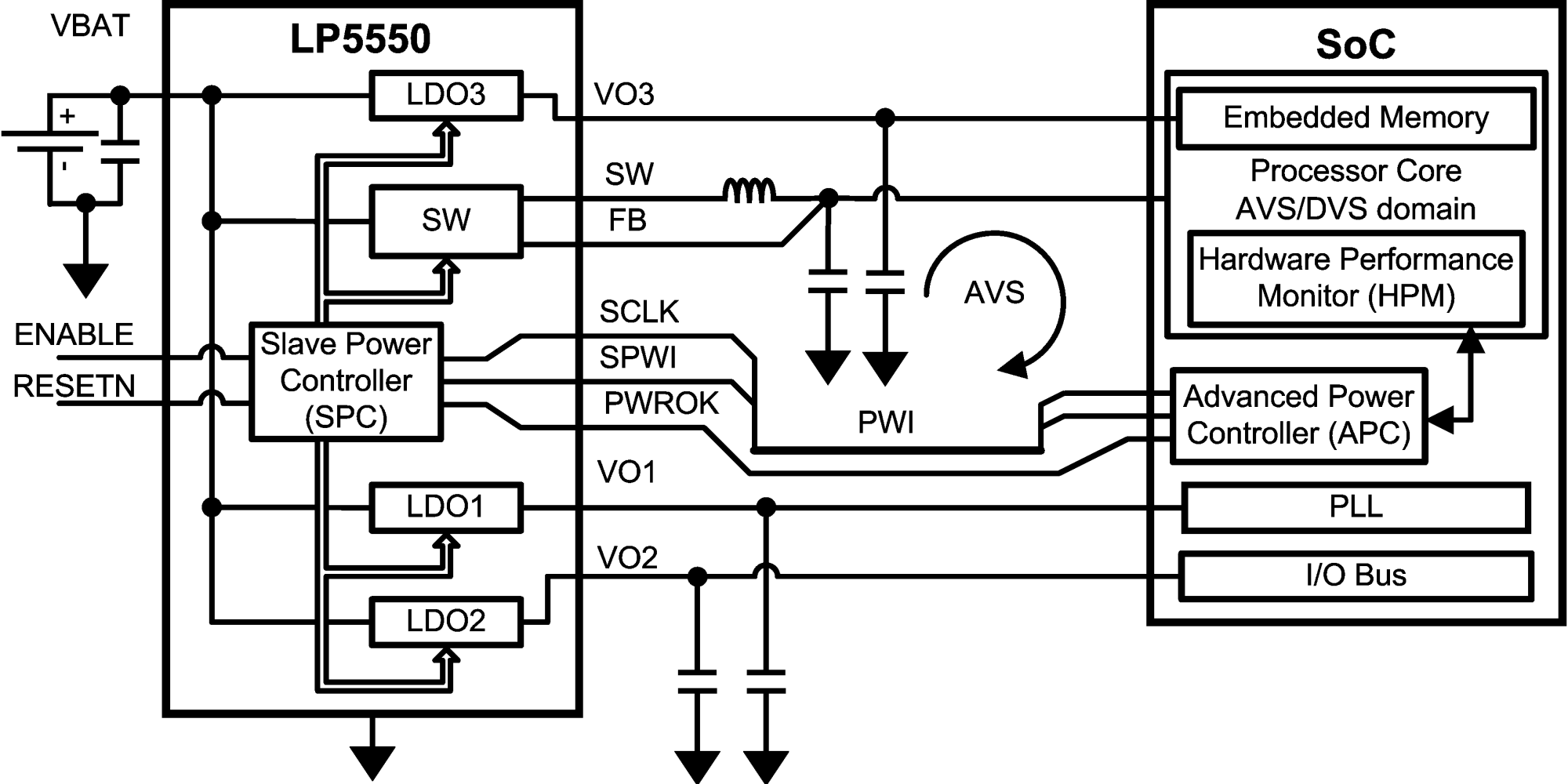
VBAT
LP5550
LDO3
VO3
SW
SW
FB
ENABLE
RESETN
Slave Power Controller (SPC)
SCLK
SPWI
PWROK
AVS
PWI
VO1
LDO1
VO2
LDO2
SoC
Embedded Memory
Processor Core AVS/DVS domain
Hardware Performance Monitor (HPM)
Advanced Power Controller (APC)
PLL
I/O Bus