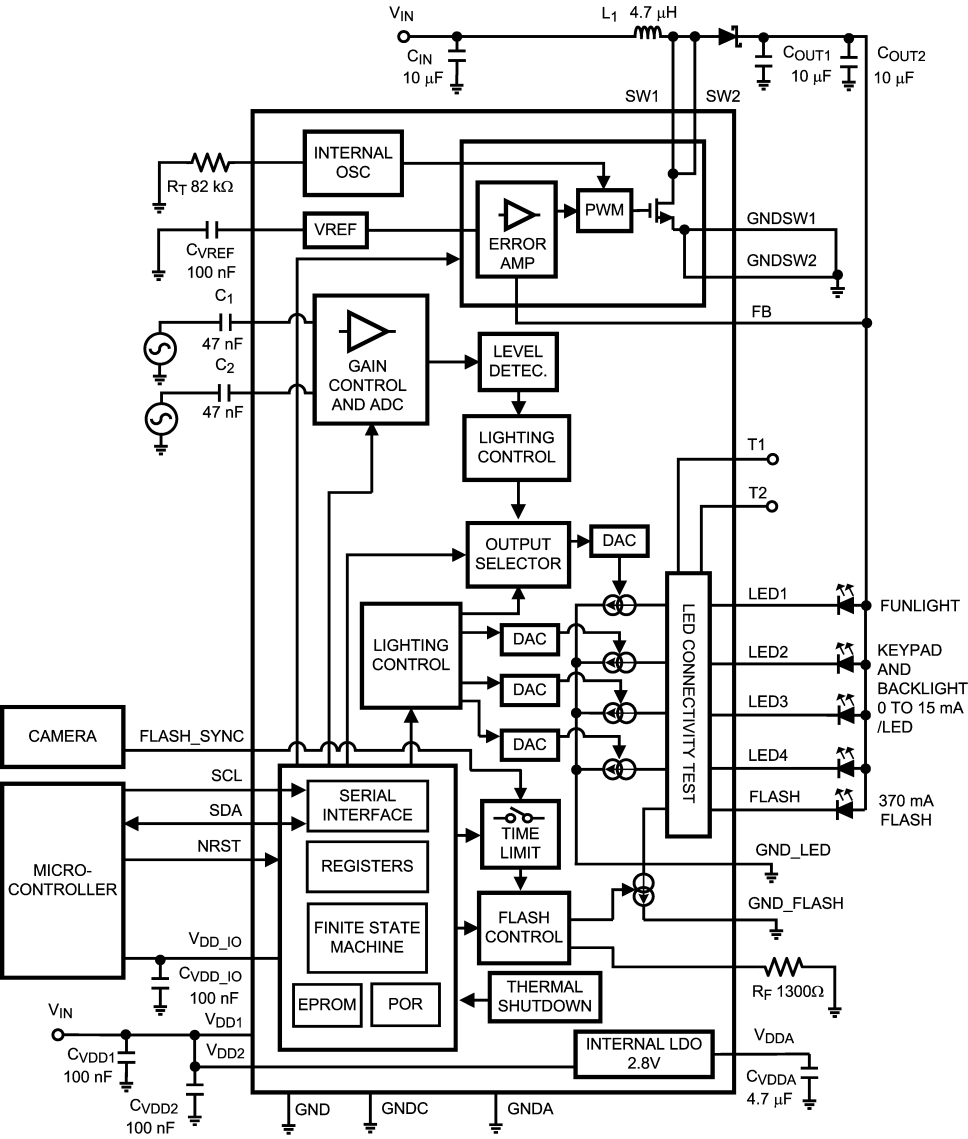
VIN
L1 4.7 µH
CIN
10 µF
COUT1
10 µF
COUT2
10 µF
SW1
SW2
INTERNAL OSC
RT 82 kΩ
VREF
CVREF
100 nF
ERROR AMP
PWM
GNDSW1
GNDSW2
FB
C1
47 nF
C2
47 nF
GAIN CONTROL AND ADC
LEVEL DETEC.
LIGHTING CONTROL
T1
T2
OUTPUT SELECTOR
DAC
LIGHTING CONTROL
DAC
DAC
DAC
LED CONNECTIVITY TEST
LED1
LED2
LED3
LED4
FLASH
FUNLIGHT
KEYPAD AND BACKLIGHT 0 TO 15 mA /LED
370 mA FLASH
CAMERA
FLASH_SYNC
SCL
SDA
NRST
MICRO-CONTROLLER
SERIAL INTERFACE
REGISTERS
FINITE STATE MACHINE
EPROM
POR
TIME LIMIT
FLASH CONTROL
THERMAL SHUTDOWN
GND_LED
GND_FLASH
RF 1300Ω
VDD_IO
CVDD_IO
100 nF
VIN
VDD1
CVDD1
100 nF
VDD2
CVDD2
100 nF
INTERNAL LDO 2.8V
VDDA
CVDDA
4.7 µF
GND
GNDC
GNDA