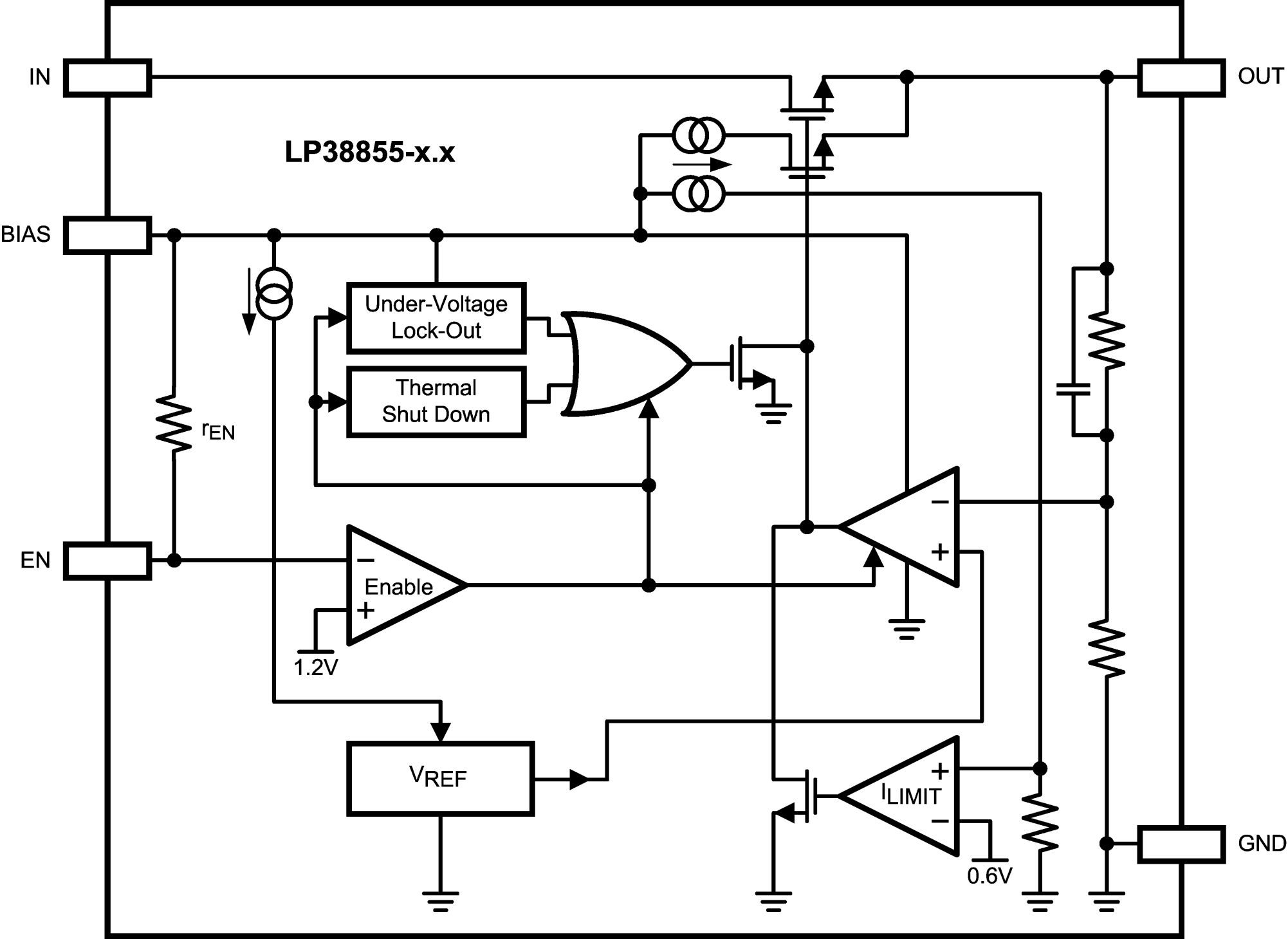
IN
OUT
LP38855-x.x
BIAS
Under-Voltage
Lock-Out
Thermal
Shut Down
rEN
EN
Enable
1.2V
VREF
ILIMIT
0.6V
GND