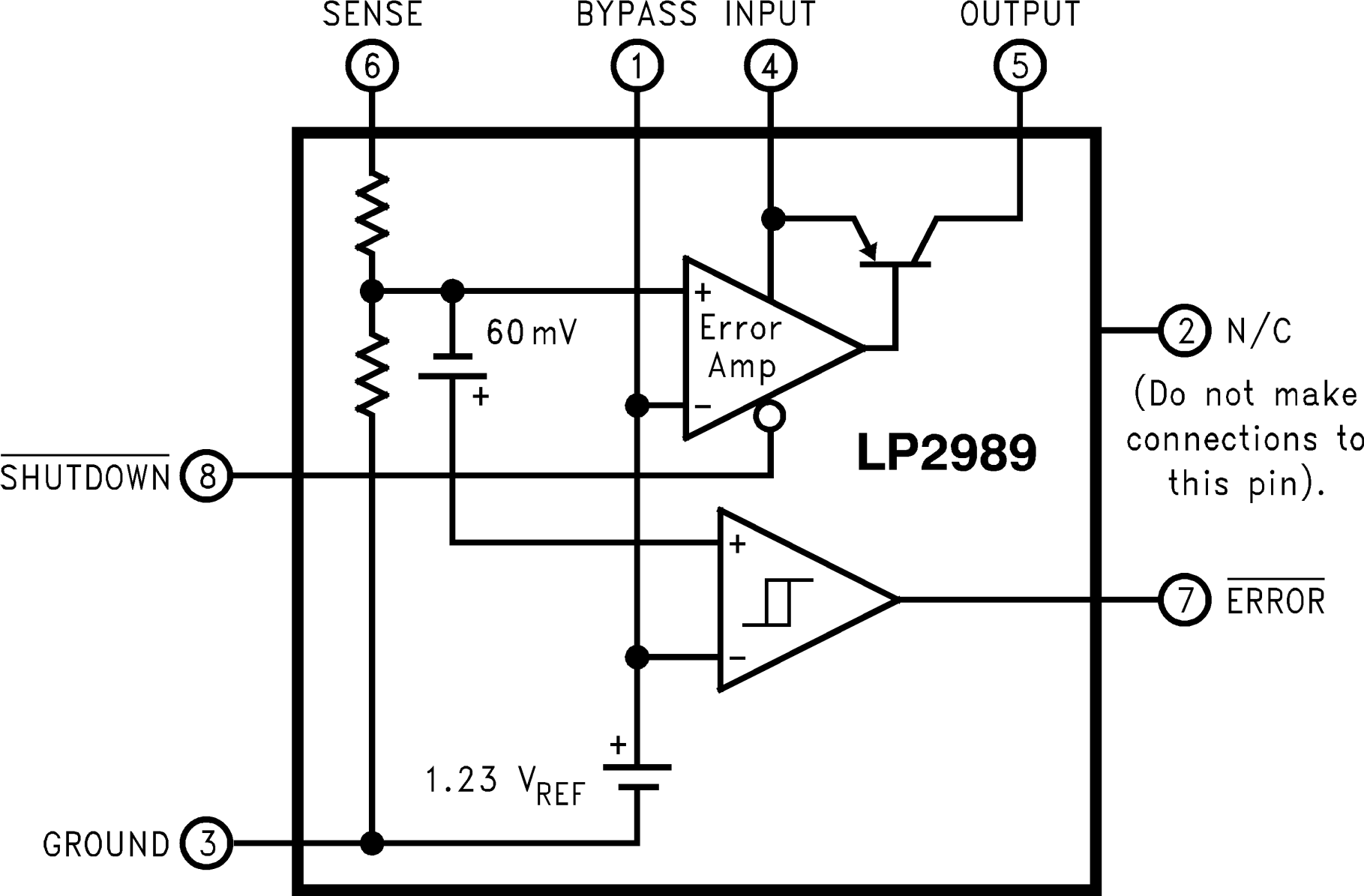
SENSE
BYPASS
INPUT
OUTPUT
6
1
4
5
60 mV
+
Error
Amp
–
2
N/C
(Do not make
connections to
this pin).
LP2989
SHUTDOWN
8
7
ERROR
1.23 V_{REF}
GROUND
3