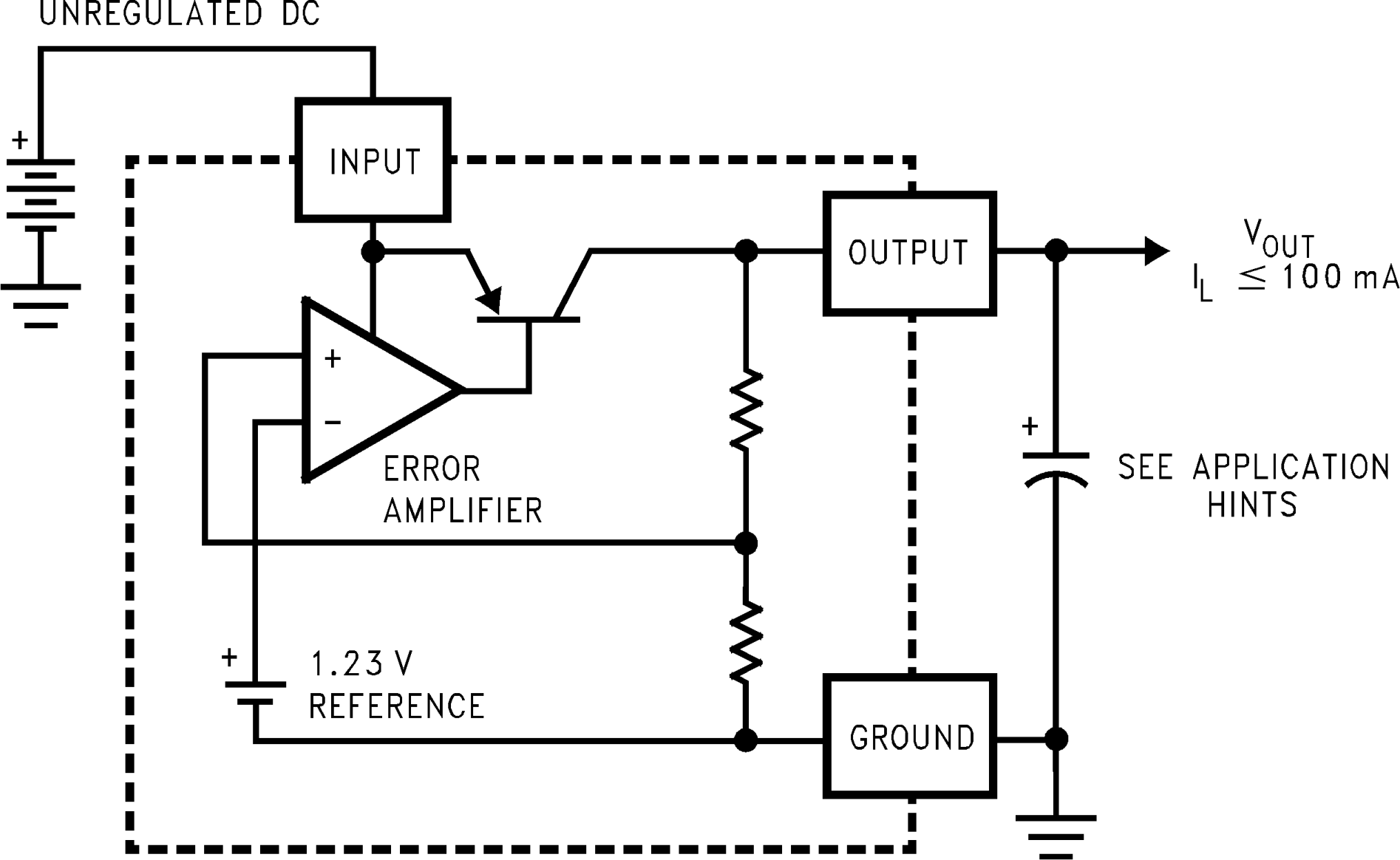
UNREGULATED DC
+
INPUT
OUTPUT
V_{OUT}
$I_L \leq 100$ mA
+
−
ERROR
AMPLIFIER
+
SEE APPLICATION
HINTS
+
1.23 V
REFERENCE
GROUND