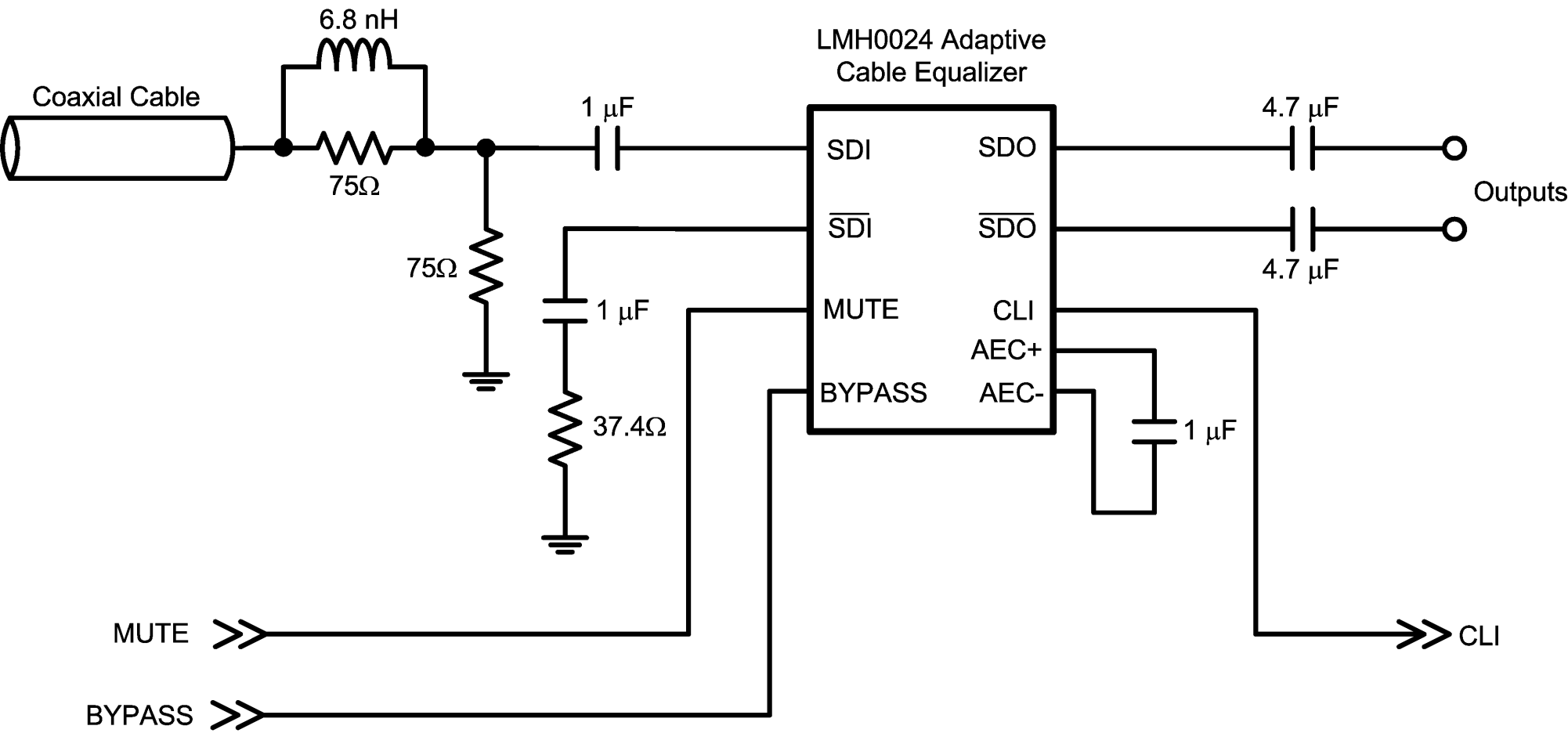
6.8 nH
Coaxial Cable
75Ω
1 µF
LMH0024 Adaptive
Cable Equalizer
SDI
SDO
SDI
SDO
MUTE
CLI
AEC+
BYPASS
AEC-
4.7 µF
Outputs
4.7 µF
75Ω
1 µF
37.4Ω
1 µF
MUTE
BYPASS
CLI