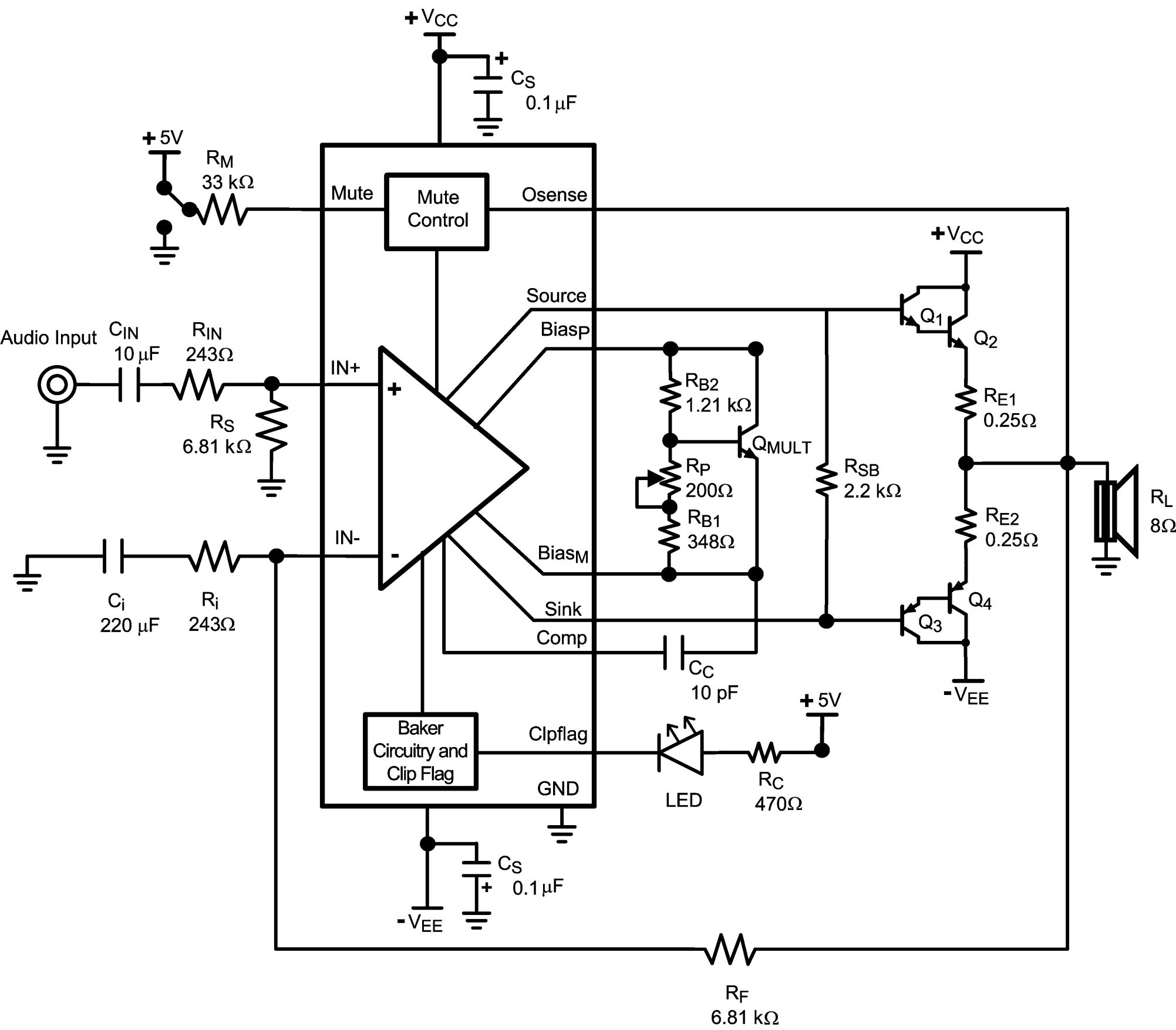
+VCC
CS
0.1 µF
+5V
RM
33 kΩ
Mute
Mute Control
Osense
+VCC
Source
Q1
Q2
Audio Input
CIN
10 µF
RIN
243Ω
BiasP
IN+
RB2
1.21 kΩ
RE1
0.25Ω
RS
6.81 kΩ
QMULT
RP
200Ω
RSB
2.2 kΩ
RL
8Ω
RB1
348Ω
RE2
0.25Ω
IN-
BiasM
Ci
220 µF
Ri
243Ω
Sink
Q4
Q3
Comp
CC
10 pF
-VEE
+5V
Baker Circuitry and Clip Flag
Clpflag
LED
RC
470Ω
GND
CS
0.1 µF
-VEE
RF
6.81 kΩ