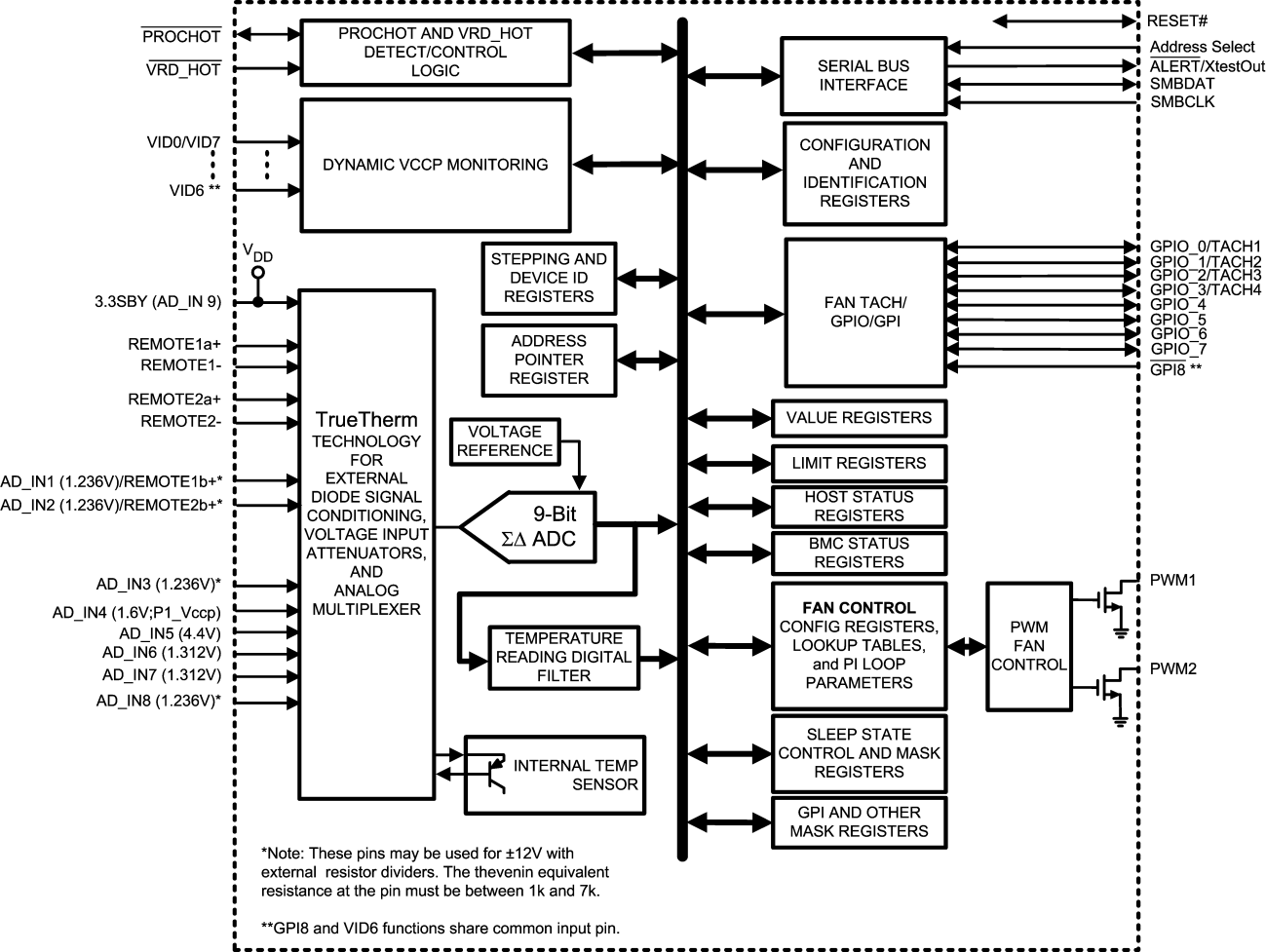
PROCHOT
VRD_HOT
PROCHOT AND VRD_HOT DETECT/CONTROL LOGIC
VID0/VID7
VID6 **
DYNAMIC VCCP MONITORING
VDD
3.3SBY (AD_IN 9)
REMOTE1a+
REMOTE1-
REMOTE2a+
REMOTE2-
AD_IN1 (1.236V)/REMOTE1b+*
AD_IN2 (1.236V)/REMOTE2b+*
AD_IN3 (1.236V)*
AD_IN4 (1.6V;P1_Vccp)
AD_IN5 (4.4V)
AD_IN6 (1.312V)
AD_IN7 (1.312V)
AD_IN8 (1.236V)*
TrueTherm TECHNOLOGY FOR EXTERNAL DIODE SIGNAL CONDITIONING, VOLTAGE INPUT ATTENUATORS, AND ANALOG MULTIPLEXER
STEPPING AND DEVICE ID REGISTERS
ADDRESS POINTER REGISTER
VOLTAGE REFERENCE
9-Bit ΣΔ ADC
TEMPERATURE READING DIGITAL FILTER
INTERNAL TEMP SENSOR
SERIAL BUS INTERFACE
CONFIGURATION AND IDENTIFICATION REGISTERS
FAN TACH/ GPIO/GPI
VALUE REGISTERS
LIMIT REGISTERS
HOST STATUS REGISTERS
BMC STATUS REGISTERS
FAN CONTROL CONFIG REGISTERS, LOOKUP TABLES, and PI LOOP PARAMETERS
SLEEP STATE CONTROL AND MASK REGISTERS
GPI AND OTHER MASK REGISTERS
PWM FAN CONTROL
RESET#
Address Select
ALERT/XtestOut
SMBDAT
SMBCLK
GPIO_0/TACH1
GPIO_1/TACH2
GPIO_2/TACH3
GPIO_3/TACH4
GPIO_4
GPIO_5
GPIO_6
GPIO_7
GPI8 **
PWM1
PWM2
*Note: These pins may be used for ±12V with external resistor dividers. The thevenin equivalent resistance at the pin must be between 1k and 7k.
**GPI8 and VID6 functions share common input pin.