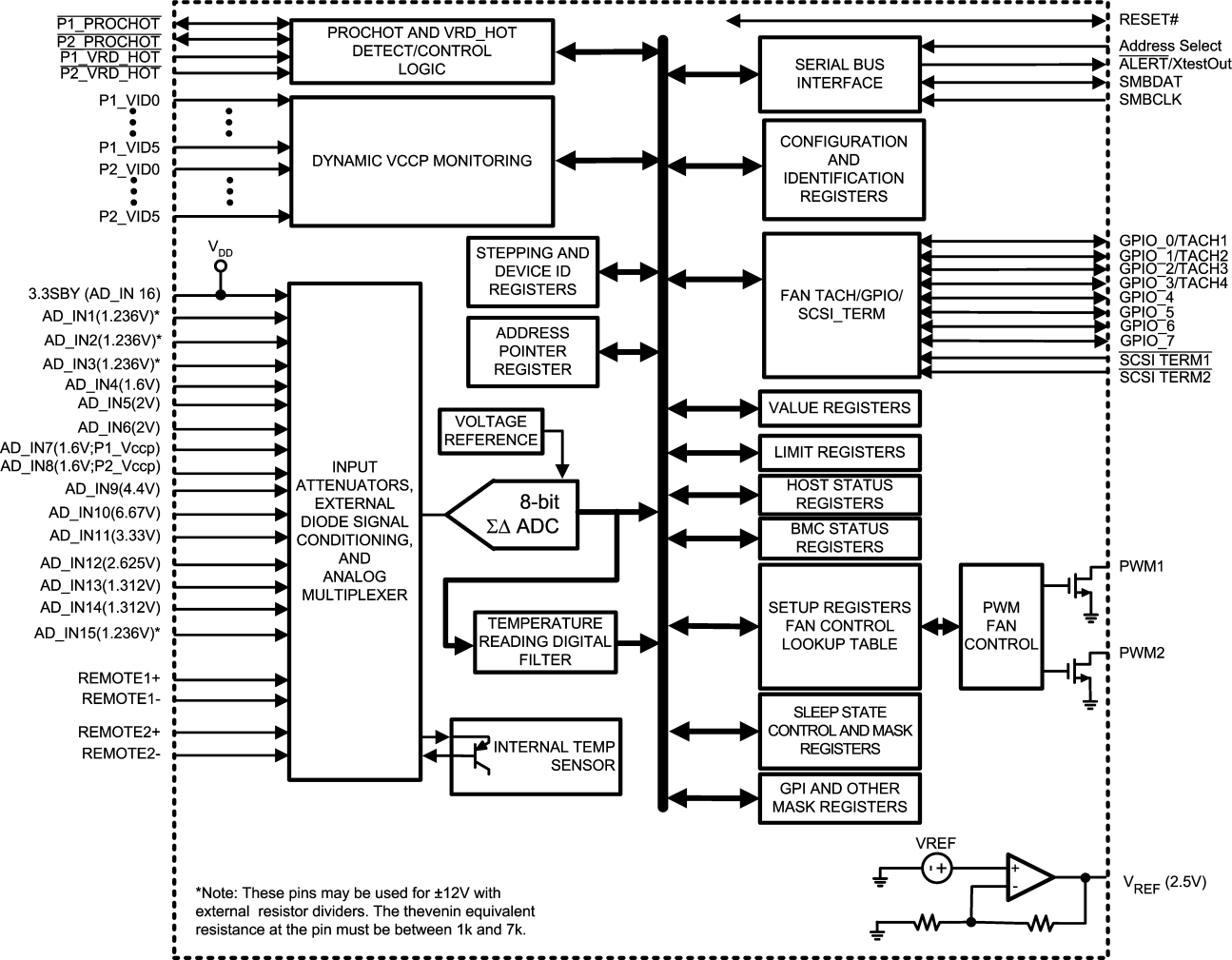
P1_PROCHOT
P2_PROCHOT
P1_VRD_HOT
P2_VRD_HOT
PROCHOT AND VRD_HOT DETECT/CONTROL LOGIC
P1_VID0
P1_VID5
P2_VID0
P2_VID5
DYNAMIC VCCP MONITORING
RESET#
SERIAL BUS INTERFACE
Address Select
ALERT/XtestOut
SMBDAT
SMBCLK
CONFIGURATION AND IDENTIFICATION REGISTERS
VDD
STEPPING AND DEVICE ID REGISTERS
ADDRESS POINTER REGISTER
FAN TACH/GPIO/ SCSI_TERM
GPIO_0/TACH1
GPIO_1/TACH2
GPIO_2/TACH3
GPIO_3/TACH4
GPIO_4
GPIO_5
GPIO_6
GPIO_7
SCSI TERM1
SCSI TERM2
3.3SBY (AD_IN 16)
AD_IN1(1.236V)*
AD_IN2(1.236V)*
AD_IN3(1.236V)*
AD_IN4(1.6V)
AD_IN5(2V)
AD_IN6(2V)
AD_IN7(1.6V;P1_Vccp)
AD_IN8(1.6V;P2_Vccp)
AD_IN9(4.4V)
AD_IN10(6.67V)
AD_IN11(3.33V)
AD_IN12(2.625V)
AD_IN13(1.312V)
AD_IN14(1.312V)
AD_IN15(1.236V)*
REMOTE1+
REMOTE1-
REMOTE2+
REMOTE2-
INPUT ATTENUATORS, EXTERNAL DIODE SIGNAL CONDITIONING, AND ANALOG MULTIPLEXER
VOLTAGE REFERENCE
8-bit ΣΔ ADC
TEMPERATURE READING DIGITAL FILTER
INTERNAL TEMP SENSOR
VALUE REGISTERS
LIMIT REGISTERS
HOST STATUS REGISTERS
BMC STATUS REGISTERS
SETUP REGISTERS FAN CONTROL LOOKUP TABLE
PWM FAN CONTROL
PWM1
PWM2
SLEEP STATE CONTROL AND MASK REGISTERS
GPI AND OTHER MASK REGISTERS
VREF
VREF (2.5V)
*Note: These pins may be used for ±12V with external resistor dividers. The thevenin equivalent resistance at the pin must be between 1k and 7k.