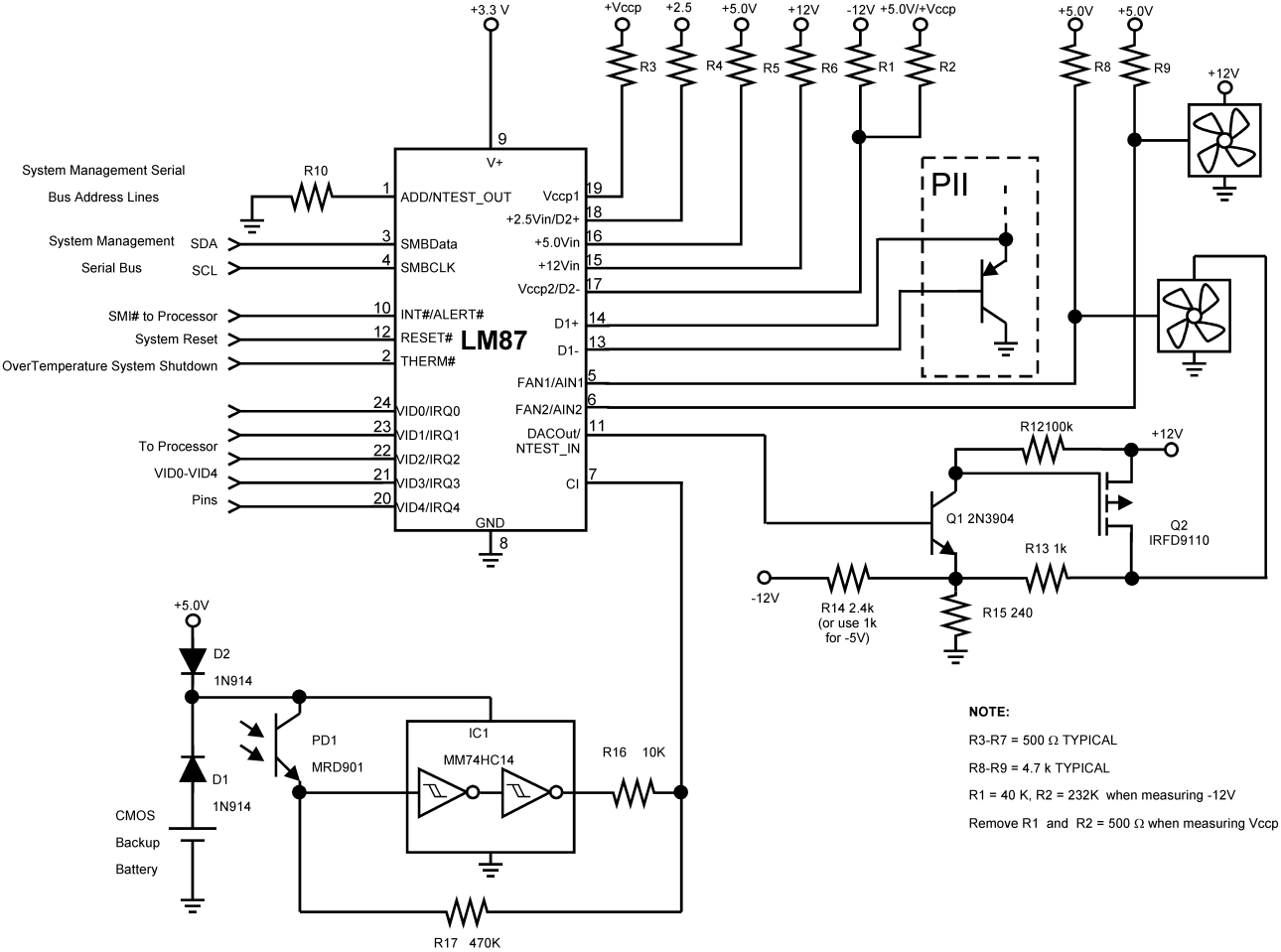
+3.3 V
+Vccp
+2.5
+5.0V
+12V
-12V
+5.0V/+Vccp
+5.0V
+5.0V
R3
R4
R5
R6
R1
R2
R8
R9
+12V
System Management Serial
Bus Address Lines
R10
System Management
Serial Bus
SDA
SCL
SMI# to Processor
System Reset
OverTemperature System Shutdown
To Processor
VID0-VID4
Pins
LM87
V+
ADD/NTEST_OUT
SMBData
SMBCLK
INT#/ALERT#
RESET#
THERM#
VID0/IRQ0
VID1/IRQ1
VID2/IRQ2
VID3/IRQ3
VID4/IRQ4
GND
Vccp1
+2.5Vin/D2+
+5.0Vin
+12Vin
Vccp2/D2-
D1+
D1-
FAN1/AIN1
FAN2/AIN2
DACOut/
NTEST_IN
CI
PII
R12100k
+12V
Q1 2N3904
Q2
IRFD9110
R13 1k
-12V
R14 2.4k
(or use 1k
for -5V)
R15 240
+5.0V
D2
1N914
D1
1N914
CMOS
Backup
Battery
PD1
MRD901
IC1
MM74HC14
R16 10K
R17 470K
NOTE:
R3-R7 = 500 Ω TYPICAL
R8-R9 = 4.7 k TYPICAL
R1 = 40 K, R2 = 232K when measuring -12V
Remove R1 and R2 = 500 Ω when measuring Vccp