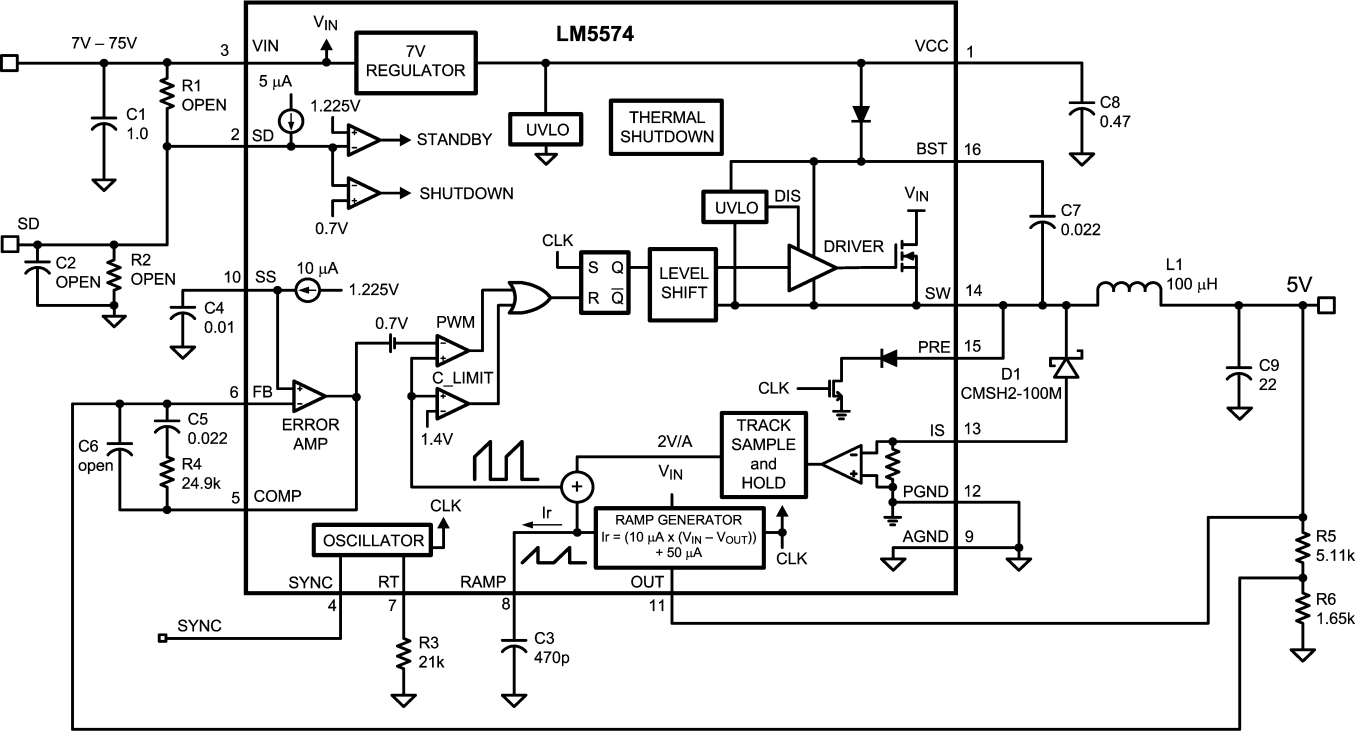
LM5574
7V – 75V
3
VIN
VIN
7V
REGULATOR
VCC
1
C8
0.47
R1
OPEN
C1
1.0
5 µA
1.225V
2
SD
STANDBY
UVLO
THERMAL
SHUTDOWN
SHUTDOWN
0.7V
BST
16
C7
0.022
UVLO
DIS
VIN
DRIVER
SD
C2
OPEN
R2
OPEN
CLK
S
Q
R
Q
LEVEL
SHIFT
10
SS
10 µA
1.225V
C4
0.01
SW
14
L1
100 µH
5V
0.7V
PWM
PRE
15
C_LIMIT
D1
CMSH2-100M
C9
22
6
FB
CLK
ERROR
AMP
1.4V
C5
0.022
C6
open
R4
24.9k
2V/A
TRACK
SAMPLE
and
HOLD
IS
13
VIN
PGND
12
5
COMP
CLK
Ir
RAMP GENERATOR
Ir = (10 µA x (VIN – VOUT))
+ 50 µA
CLK
OSCILLATOR
AGND
9
R5
5.11k
SYNC
RT
RAMP
OUT
4
7
8
11
R6
1.65k
SYNC
R3
21k
C3
470p