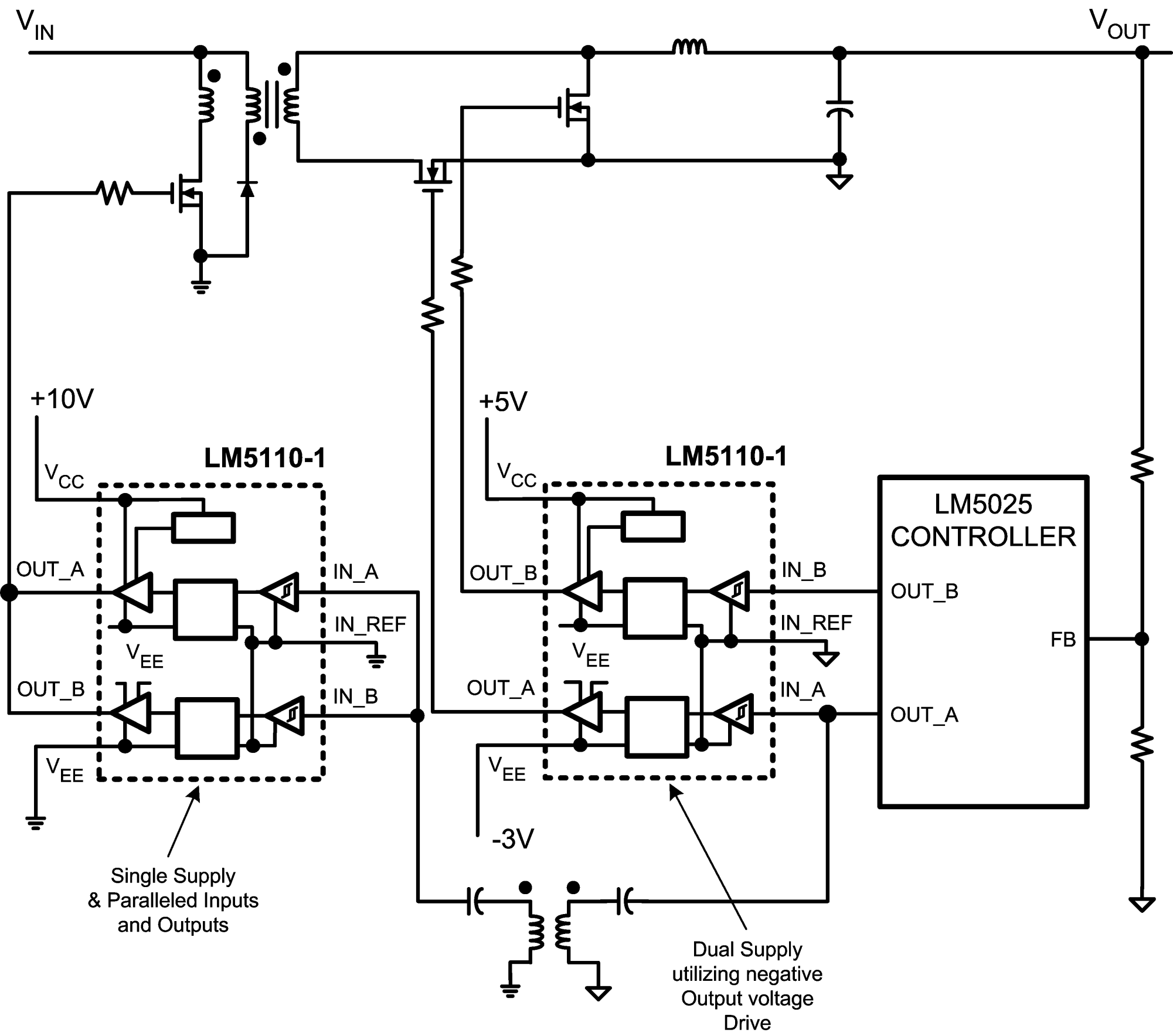
VIN
VOUT
+10V
VCC
LM5110-1
OUT_A
IN_A
IN_REF
VEE
OUT_B
IN_B
VEE
+5V
VCC
LM5110-1
OUT_B
IN_B
IN_REF
VEE
OUT_A
IN_A
VEE
-3V
LM5025
CONTROLLER
OUT_B
FB
OUT_A
Single Supply
& Paralleled Inputs
and Outputs
Dual Supply
utilizing negative
Output voltage
Drive