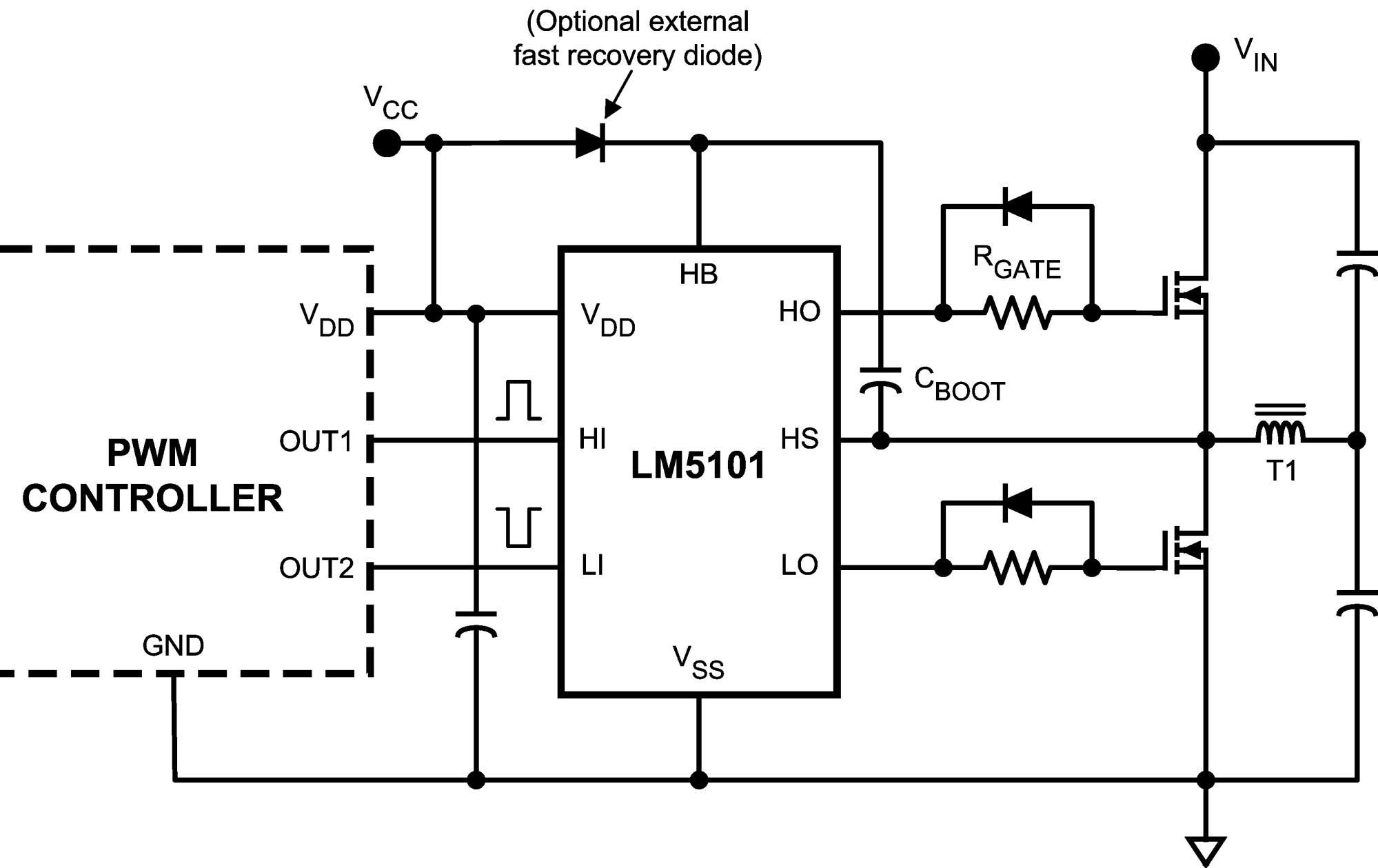
(Optional external
fast recovery diode)
VCC
VIN
HB
VDD
HO
RGATE
CBOOT
PWM
CONTROLLER
OUT1
HI
HS
LM5101
T1
OUT2
LI
LO
GND
VSS