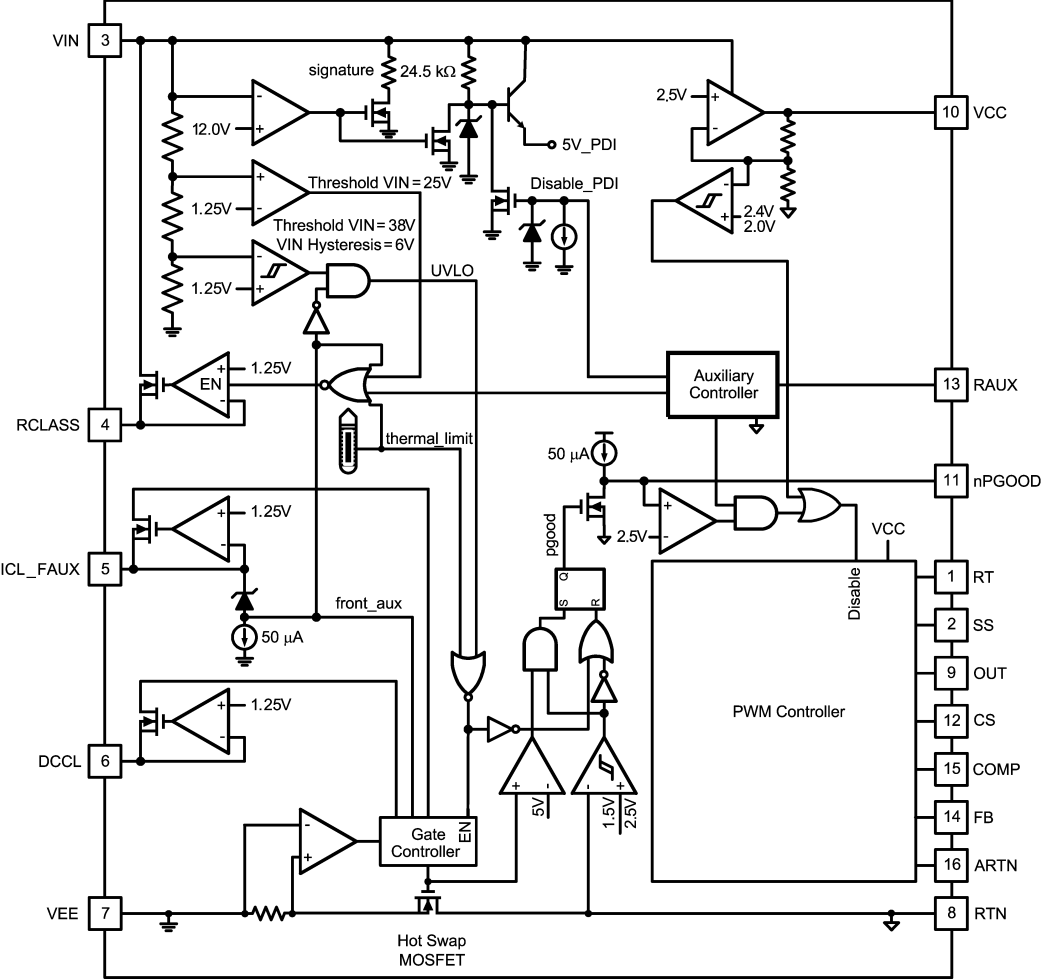
VIN
3
signature
24.5 kΩ
12.0V
5V_PDI
2.5V
10
VCC
Threshold VIN = 25V
Disable_PDI
1.25V
Threshold VIN = 38V
VIN Hysteresis = 6V
2.4V
2.0V
1.25V
UVLO
EN
1.25V
Auxiliary Controller
13
RAUX
RCLASS
4
thermal_limit
50 µA
11
nPGOOD
1.25V
pgood
2.5V
VCC
ICL_FAUX
5
S
Q
R
Disable
1
RT
front_aux
2
SS
50 µA
9
OUT
1.25V
PWM Controller
12
CS
DCCL
6
15
COMP
5V
1.5V
2.5V
14
FB
Gate Controller
EN
16
ARTN
VEE
7
8
RTN
Hot Swap
MOSFET