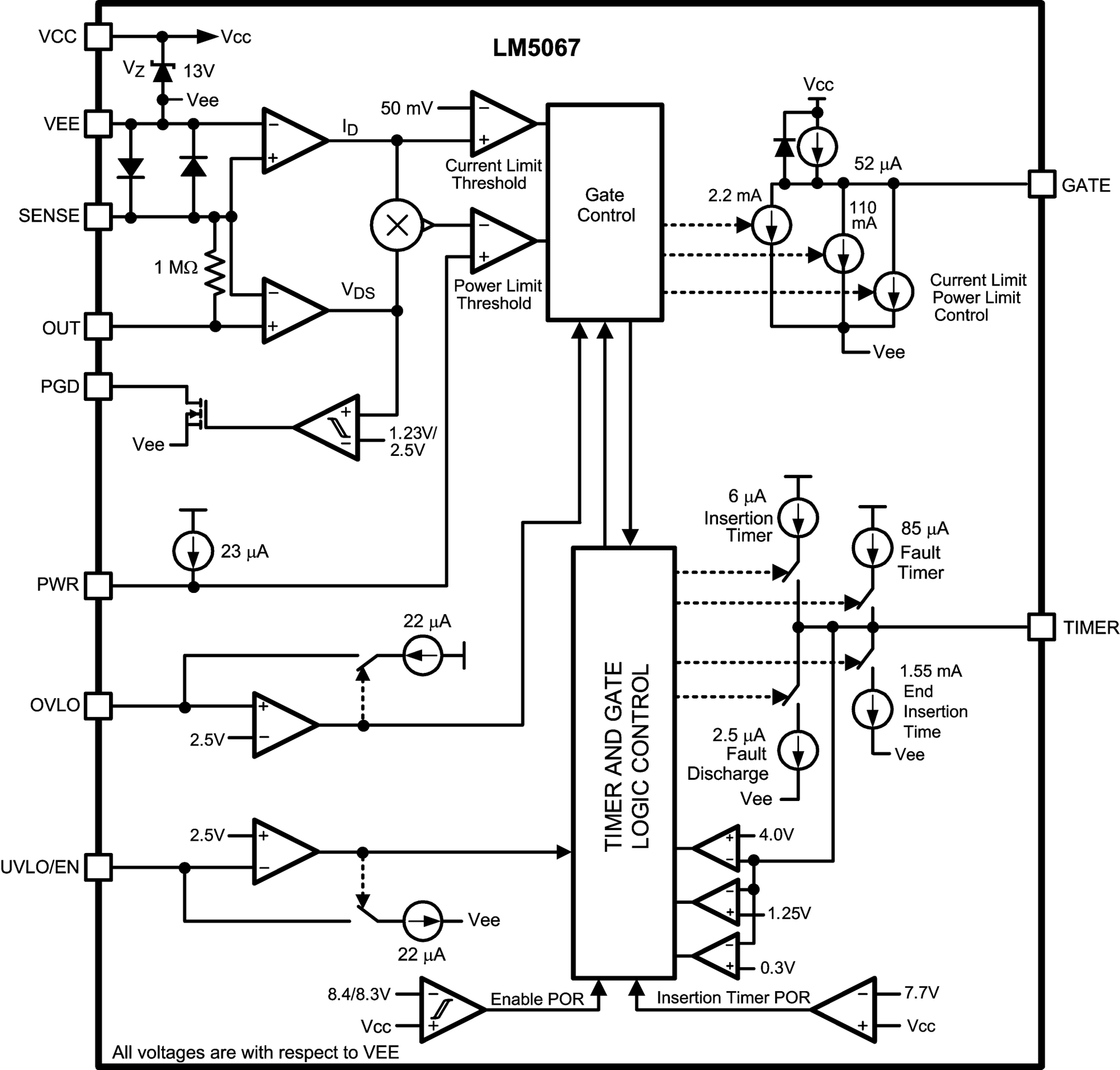
LM5067
VCC
Vcc
VZ
13V
Vee
VEE
SENSE
OUT
PGD
PWR
OVLO
UVLO/EN
1 MΩ
ID
VDS
50 mV
Current Limit Threshold
Power Limit Threshold
Gate Control
Vcc
52 µA
2.2 mA
110 mA
Current Limit Power Limit Control
Vee
GATE
Vee
1.23V/ 2.5V
23 µA
6 µA Insertion Timer
85 µA Fault Timer
TIMER
22 µA
1.55 mA End Insertion Time
Vee
2.5 µA Fault Discharge
Vee
2.5V
2.5V
Vee
22 µA
TIMER AND GATE LOGIC CONTROL
4.0V
1.25V
0.3V
8.4/8.3V
Vcc
Enable POR
Insertion Timer POR
7.7V
Vcc
All voltages are with respect to VEE