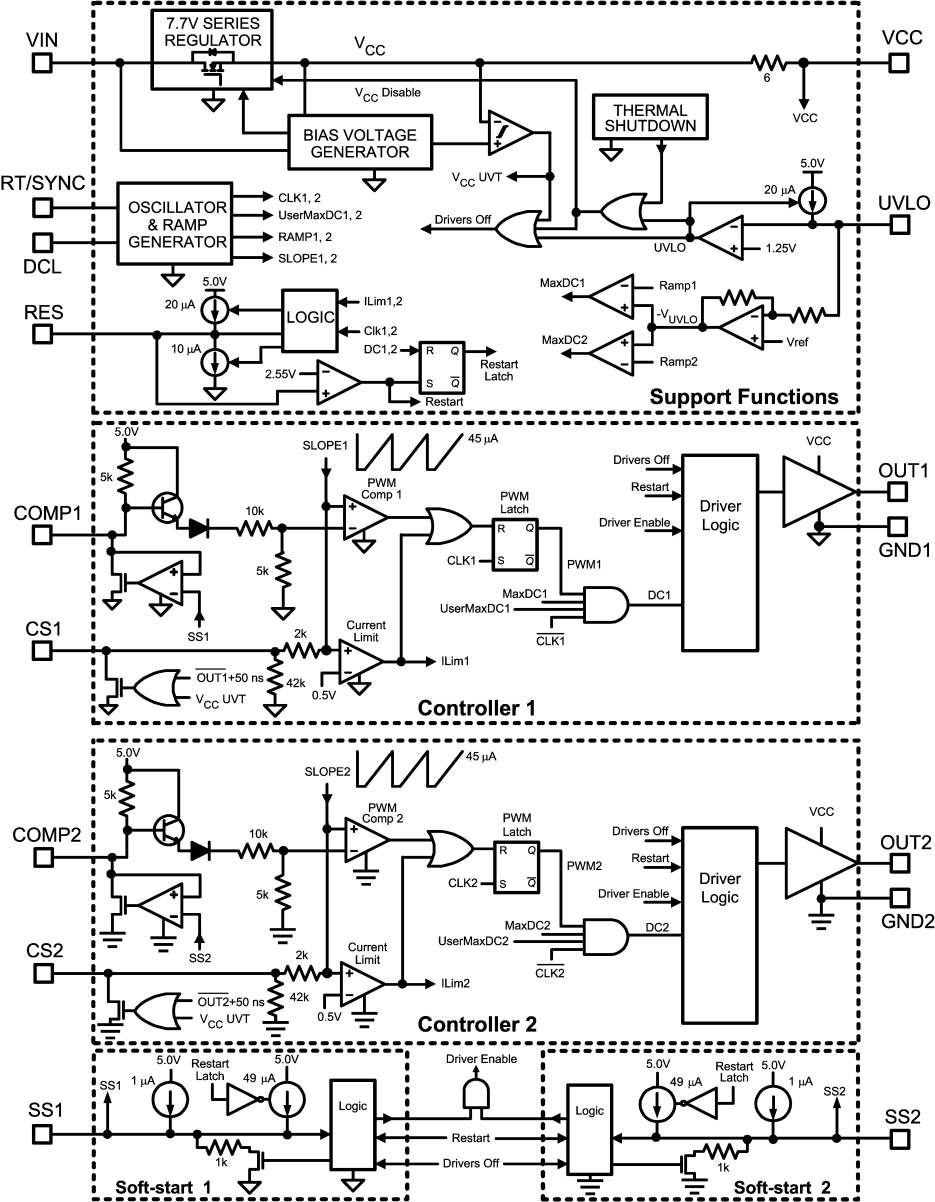
VIN
7.7V SERIES REGULATOR
VCC
6
VCC
VCC Disable
BIAS VOLTAGE GENERATOR
THERMAL SHUTDOWN
VCC UVT
5.0V
20 µA
RT/SYNC
OSCILLATOR & RAMP GENERATOR
CLK1, 2
UserMaxDC1, 2
RAMP1, 2
SLOPE1, 2
Drivers Off
UVLO
1.25V
UVLO
DCL
5.0V
20 µA
RES
LOGIC
ILim1,2
Clk1,2
10 µA
DC1,2
R Q
S Q̄
Restart Latch
2.55V
Restart
MaxDC1
Ramp1
-VUVLO
MaxDC2
Ramp2
Vref
Support Functions
5.0V
5k
SLOPE1
45 µA
PWM Comp 1
PWM Latch
Drivers Off
Restart
Driver Enable
Driver Logic
VCC
OUT1
COMP1
10k
5k
CLK1
PWM1
GND1
MaxDC1
UserMaxDC1
DC1
CS1
SS1
2k
Current Limit
ILim1
OUT1+50 ns
VCC UVT
42k
0.5V
CLK1
Controller 1
5.0V
5k
SLOPE2
45 µA
PWM Comp 2
PWM Latch
Drivers Off
Restart
Driver Enable
Driver Logic
VCC
OUT2
COMP2
10k
5k
CLK2
PWM2
GND2
MaxDC2
UserMaxDC2
DC2
CS2
SS2
2k
Current Limit
ILim2
OUT2+50 ns
VCC UVT
42k
0.5V
CLK2
Controller 2
5.0V
Restart Latch
5.0V
SS1
1 µA
49 µA
Logic
Driver Enable
Restart
Drivers Off
Logic
5.0V
49 µA
Restart Latch
5.0V
1 µA
SS2
SS1
SS2
1k
1k
Soft-start 1
Soft-start 2