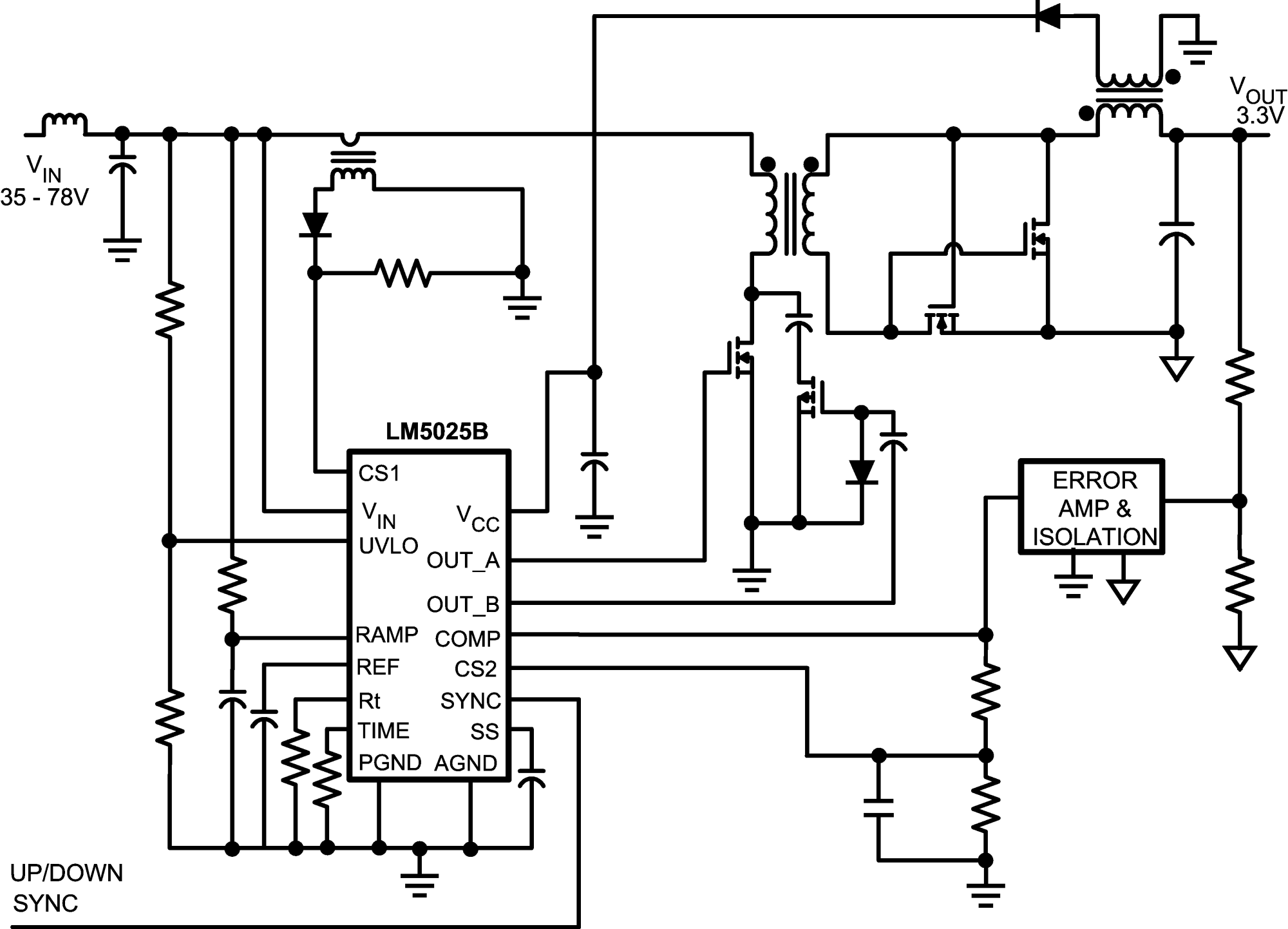
VIN
35 - 78V
VOUT
3.3V
LM5025B
CS1
VIN
UVLO
VCC
OUT_A
OUT_B
RAMP
COMP
REF
CS2
Rt
SYNC
TIME
SS
PGND
AGND
ERROR
AMP &
ISOLATION
UP/DOWN
SYNC