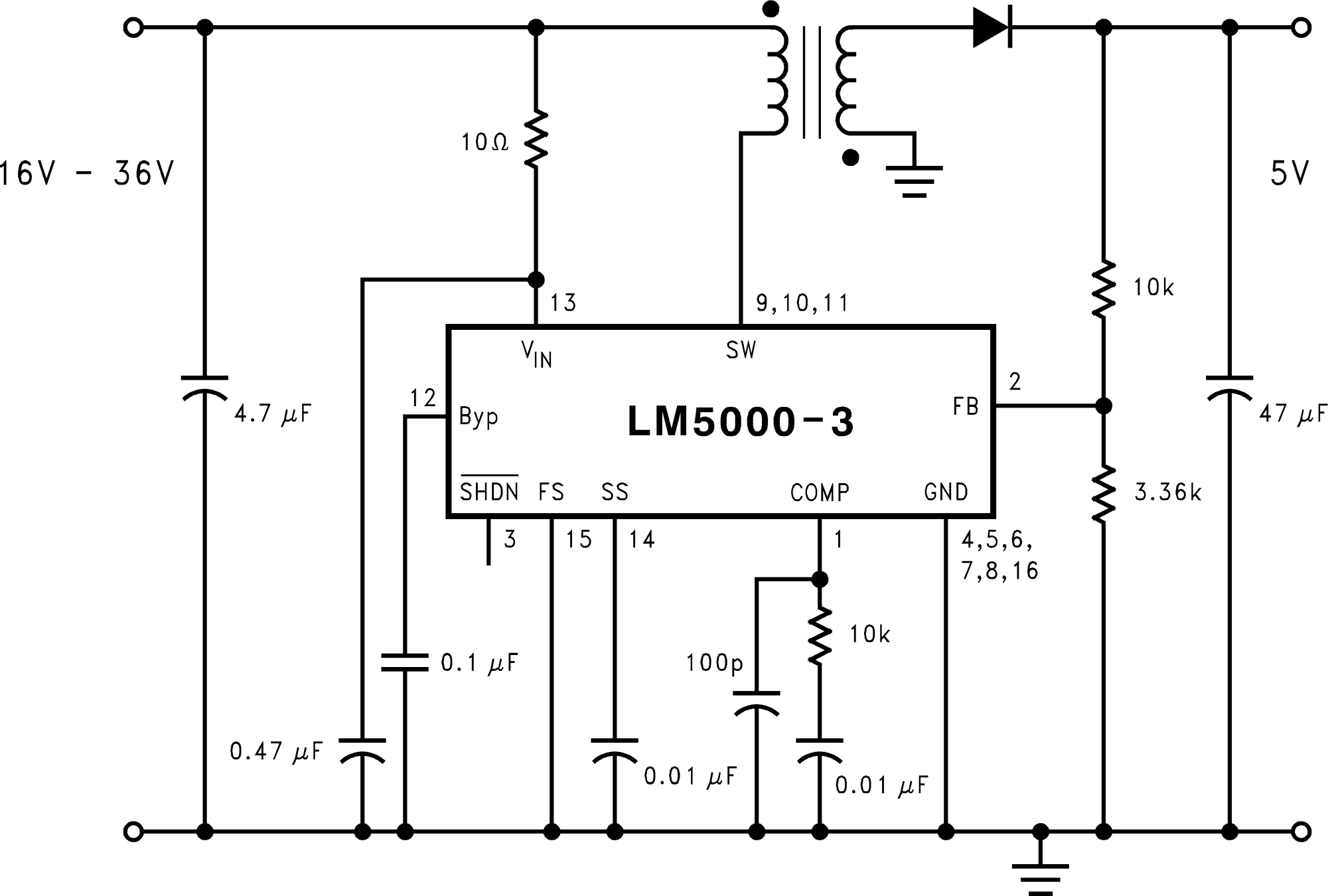
16V - 36V
5V
10Ω
13
9,10,11
V_{IN}
SW
12
Byp
LM5000-3
FB
2
SHDN
FS
SS
COMP
GND
3
15
14
1
4,5,6,
7,8,16
4.7 μF
47 μF
10k
3.36k
10k
100p
0.1 μF
0.47 μF
0.01 μF
0.01 μF