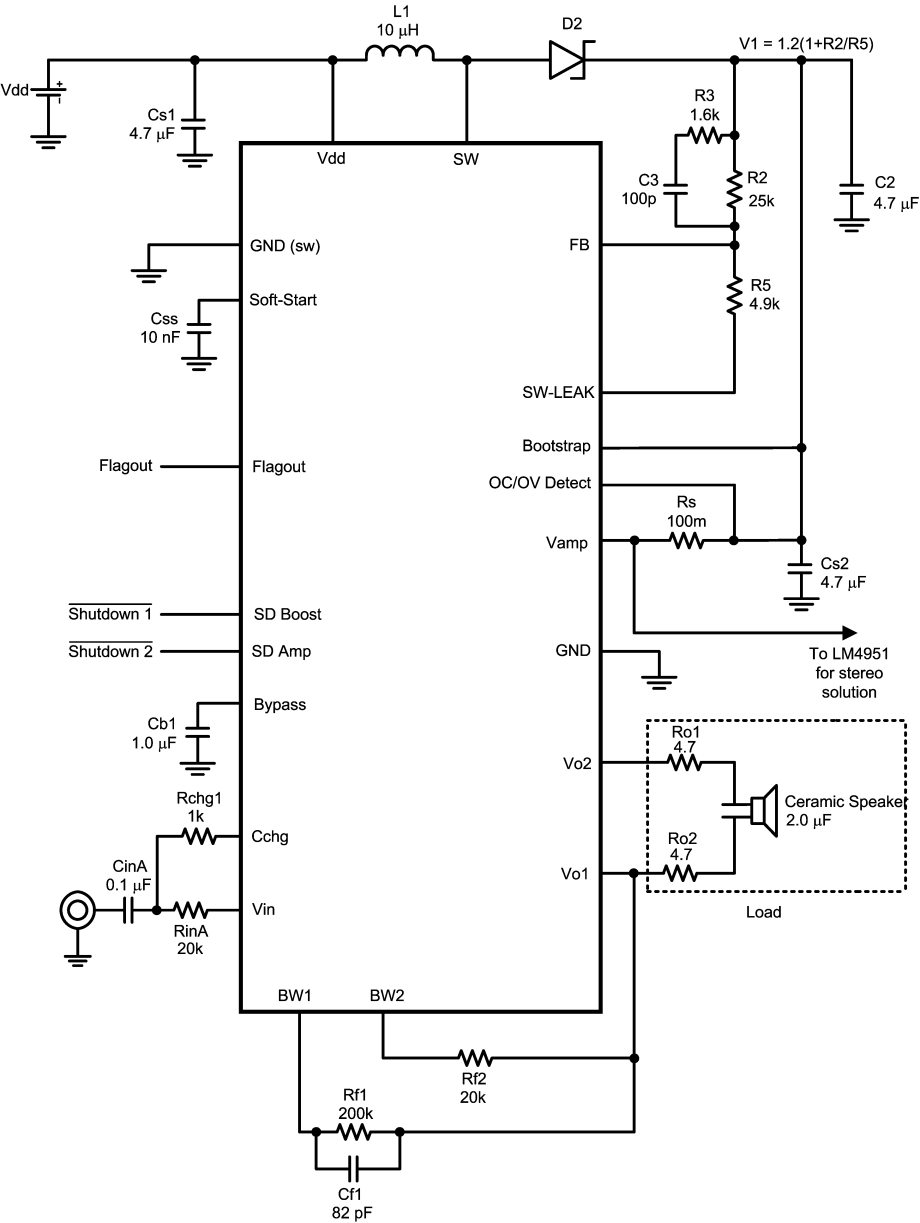
L1
10 µH
D2
V1 = 1.2(1+R2/R5)
Vdd
Cs1
4.7 µF
Vdd
SW
R3
1.6k
C3
100p
R2
25k
C2
4.7 µF
GND (sw)
FB
R5
4.9k
Soft-Start
Css
10 nF
SW-LEAK
Bootstrap
Flagout
Flagout
OC/OV Detect
Rs
100m
Vamp
Cs2
4.7 µF
Shutdown 1
SD Boost
Shutdown 2
SD Amp
GND
To LM4951
for stereo
solution
Bypass
Cb1
1.0 µF
Ro1
4.7
Vo2
Ceramic Speaker
2.0 µF
Rchg1
1k
Cchg
Ro2
4.7
CinA
0.1 µF
Vo1
Vin
RinA
20k
Load
BW1
BW2
Rf2
20k
Rf1
200k
Cf1
82 pF