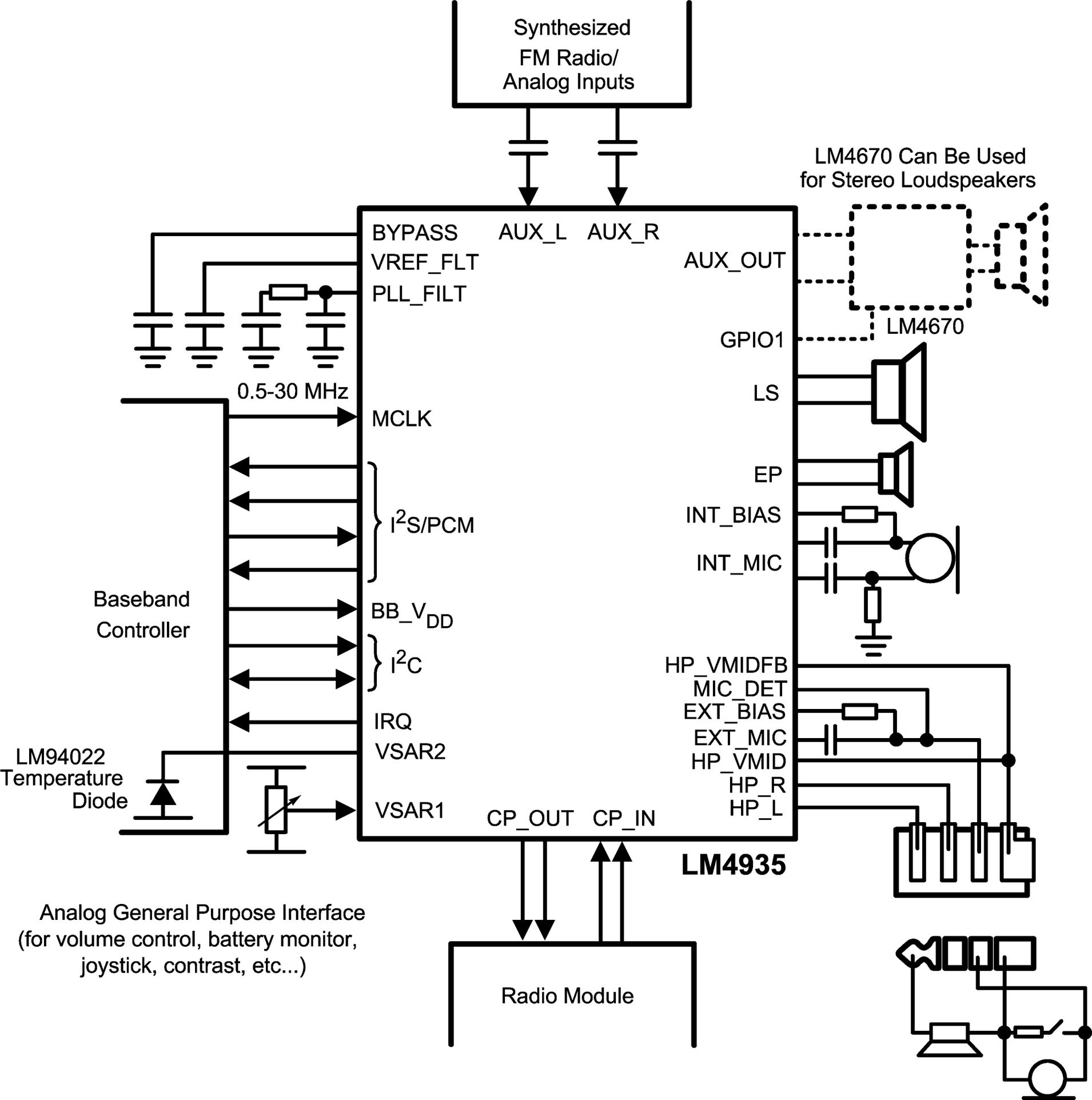
Synthesized
FM Radio/
Analog Inputs
LM4670 Can Be Used
for Stereo Loudspeakers
BYPASS
AUX_L
AUX_R
VREF_FLT
PLL_FILT
AUX_OUT
LM4670
GPIO1
LS
0.5-30 MHz
MCLK
EP
I2S/PCM
INT_BIAS
INT_MIC
Baseband
Controller
BB_VDD
I2C
HP_VMIDFB
MIC_DET
EXT_BIAS
IRQ
EXT_MIC
VSAR2
HP_VMID
LM94022
Temperature
Diode
HP_R
HP_L
VSAR1
CP_OUT
CP_IN
LM4935
Analog General Purpose Interface
(for volume control, battery monitor,
joystick, contrast, etc...)
Radio Module