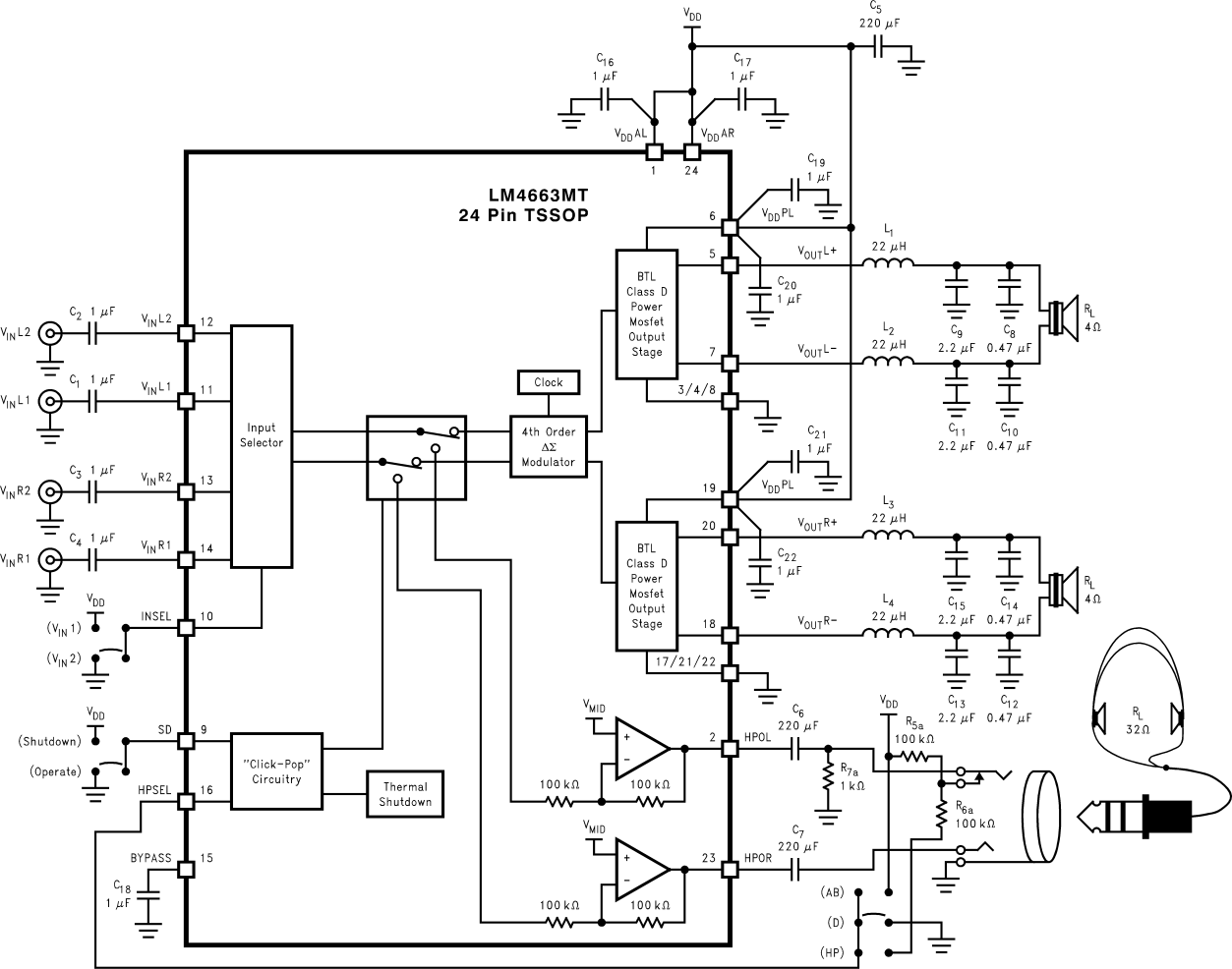
LM4663MT
24 Pin TSSOP
VDD
C5 220 µF
C16 1 µF
C17 1 µF
VDD AL
VDD AR
1
24
C19 1 µF
VDD PL
6
5
VOUT L+
L1 22 µH
C20 1 µF
BTL Class D Power Mosfet Output Stage
7
VOUT L−
L2 22 µH
3/4/8
C9 2.2 µF
C8 0.47 µF
C11 2.2 µF
C10 0.47 µF
RL 4Ω
VIN L2
C2 1 µF
VIN L2
12
VIN L1
C1 1 µF
VIN L1
11
Input Selector
Clock
4th Order ΔΣ Modulator
VIN R2
C3 1 µF
VIN R2
13
VIN R1
C4 1 µF
VIN R1
14
C21 1 µF
VDD PL
19
20
VOUT R+
L3 22 µH
C22 1 µF
BTL Class D Power Mosfet Output Stage
18
VOUT R−
L4 22 µH
17/21/22
C15 2.2 µF
C14 0.47 µF
C13 2.2 µF
C12 0.47 µF
RL 4Ω
VDD
(VIN 1)
(VIN 2)
INSEL
10
VDD
(Shutdown)
(Operate)
SD
9
HPSEL
16
"Click-Pop" Circuitry
Thermal Shutdown
BYPASS
15
C18 1 µF
VMID
100 kΩ
100 kΩ
VMID
100 kΩ
100 kΩ
2
HPOL
C6 220 µF
R7a 1 kΩ
VDD
R5a 100 kΩ
R6a 100 kΩ
23
HPOR
C7 220 µF
(AB)
(D)
(HP)
RL 32Ω