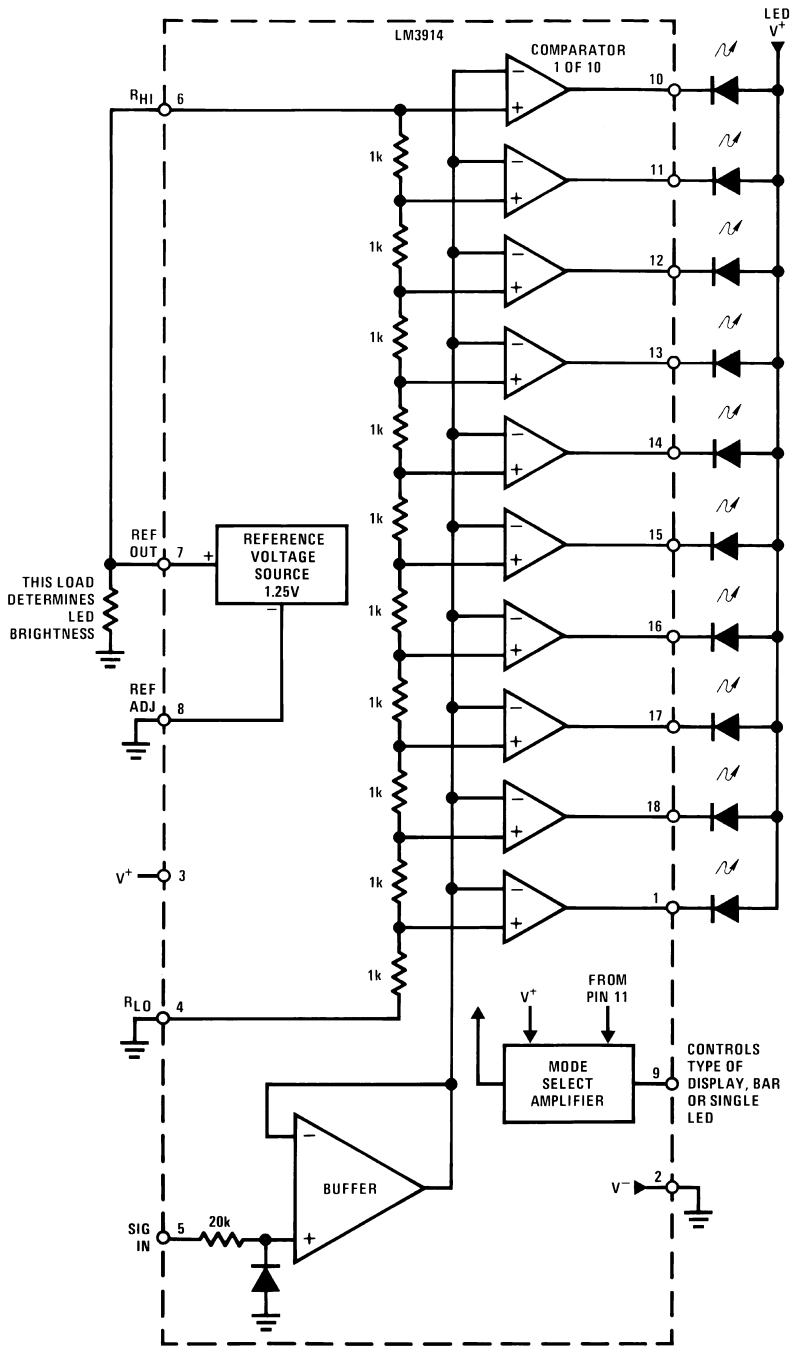
LM3914
LED
V+
COMPARATOR
1 OF 10
RHI
6
1k
10
11
12
13
14
15
16
17
18
1
REF
OUT
7
REFERENCE
VOLTAGE
SOURCE
1.25V
THIS LOAD
DETERMINES
LED
BRIGHTNESS
REF
ADJ
8
V+
3
RLO
4
FROM
PIN 11
MODE
SELECT
AMPLIFIER
9
CONTROLS
TYPE OF
DISPLAY, BAR
OR SINGLE
LED
BUFFER
V−
2
SIG
IN
5
20k