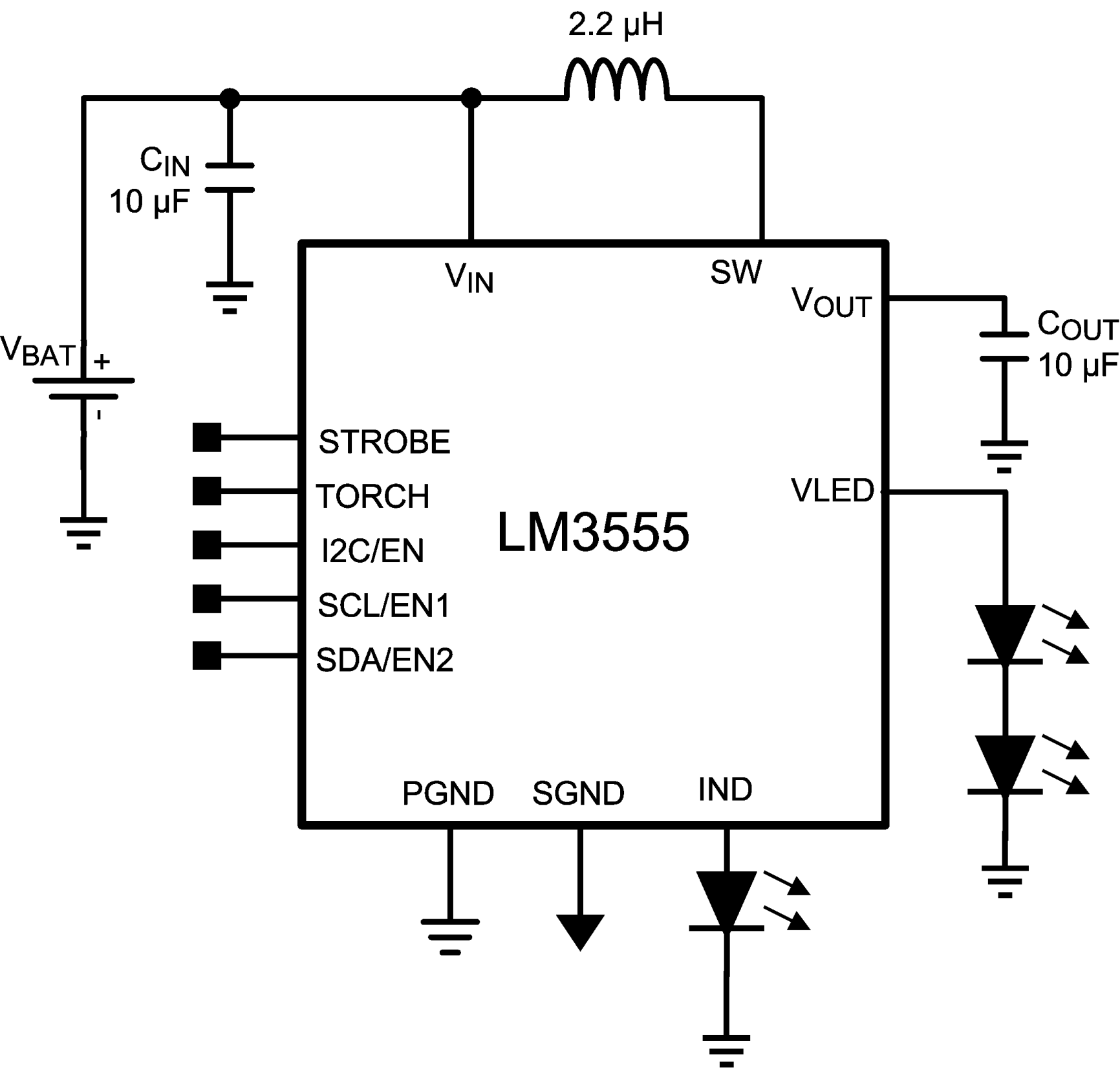
2.2 µH
CIN
10 µF
VIN
SW
VOUT
COUT
10 µF
VBAT
+
-
STROBE
TORCH
I2C/EN
SCL/EN1
SDA/EN2
LM3555
VLED
PGND
SGND
IND