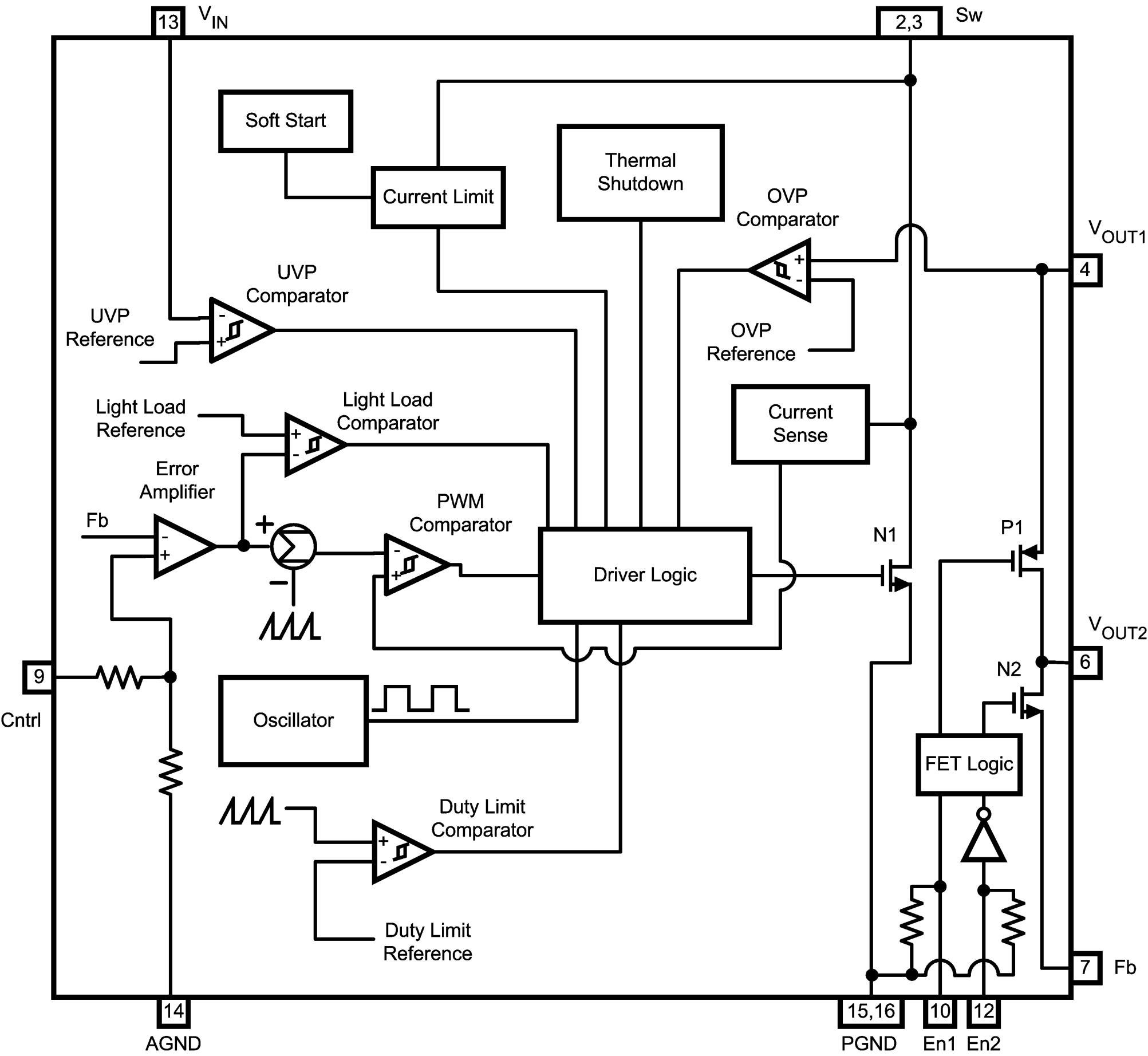
13
V_{IN}
2,3
Sw
Soft Start
Current Limit
Thermal Shutdown
OVP Comparator
V_{OUT1}
4
UVP Comparator
UVP Reference
OVP Reference
Light Load Reference
Light Load Comparator
Current Sense
Error Amplifier
Fb
PWM Comparator
Driver Logic
N1
P1
V_{OUT2}
6
N2
9
Cntrl
Oscillator
FET Logic
Duty Limit Comparator
Duty Limit Reference
7
Fb
14
AGND
15,16
PGND
10
En1
12
En2