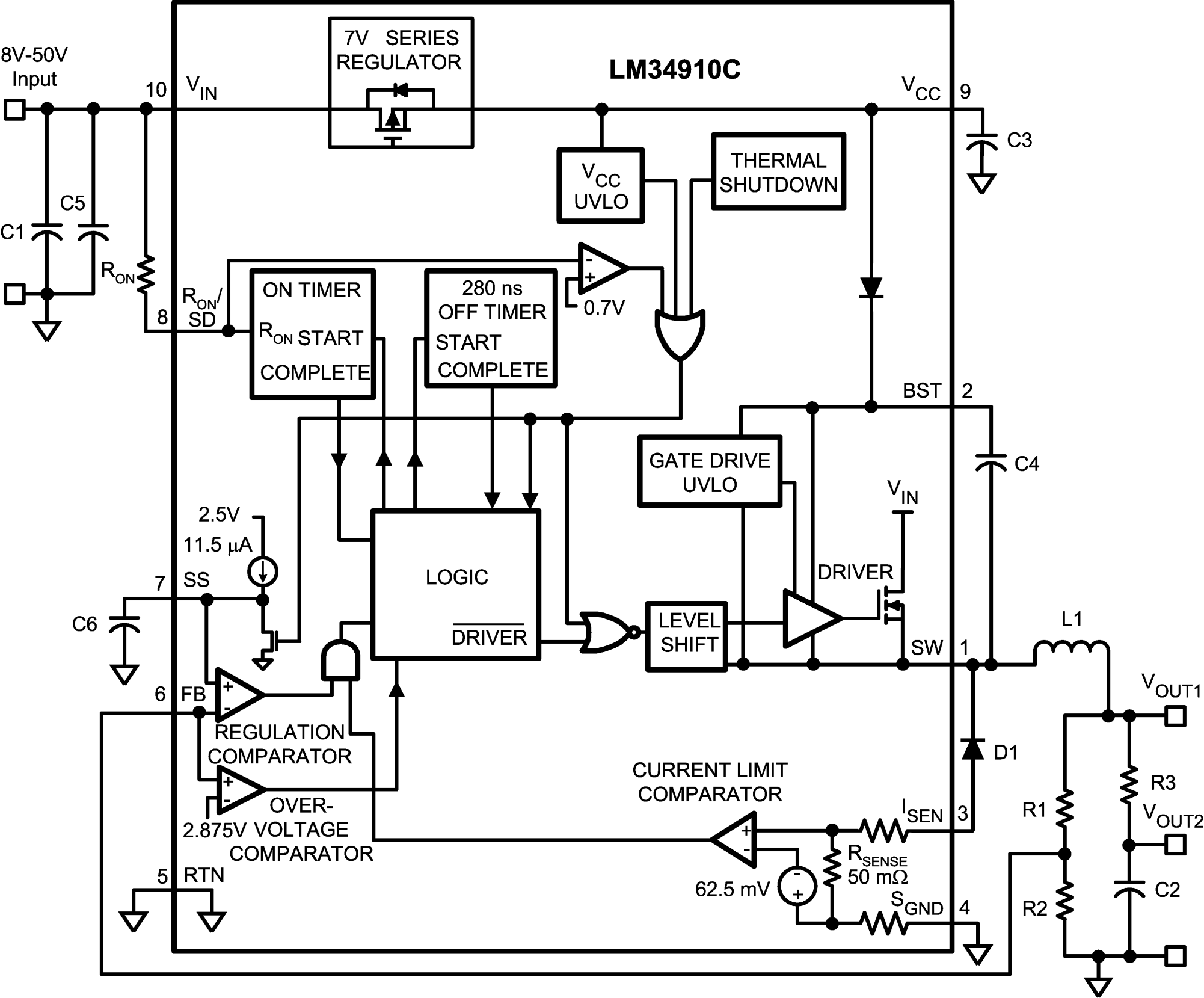
LM34910C
8V-50V
Input
10
VIN
7V SERIES
REGULATOR
VCC
9
C3
VCC
UVLO
THERMAL
SHUTDOWN
C5
C1
RON
RON/
SD
8
ON TIMER
RON START
COMPLETE
280 ns
OFF TIMER
START
COMPLETE
0.7V
BST
2
C4
GATE DRIVE
UVLO
VIN
2.5V
11.5 µA
7
SS
C6
LOGIC
DRIVER
LEVEL
SHIFT
DRIVER
SW
1
L1
VOUT1
6
FB
REGULATION
COMPARATOR
D1
CURRENT LIMIT
COMPARATOR
OVER-
2.875V VOLTAGE
COMPARATOR
ISEN
3
R1
R3
VOUT2
RSENSE
50 mΩ
62.5 mV
SGND
4
R2
C2
5
RTN