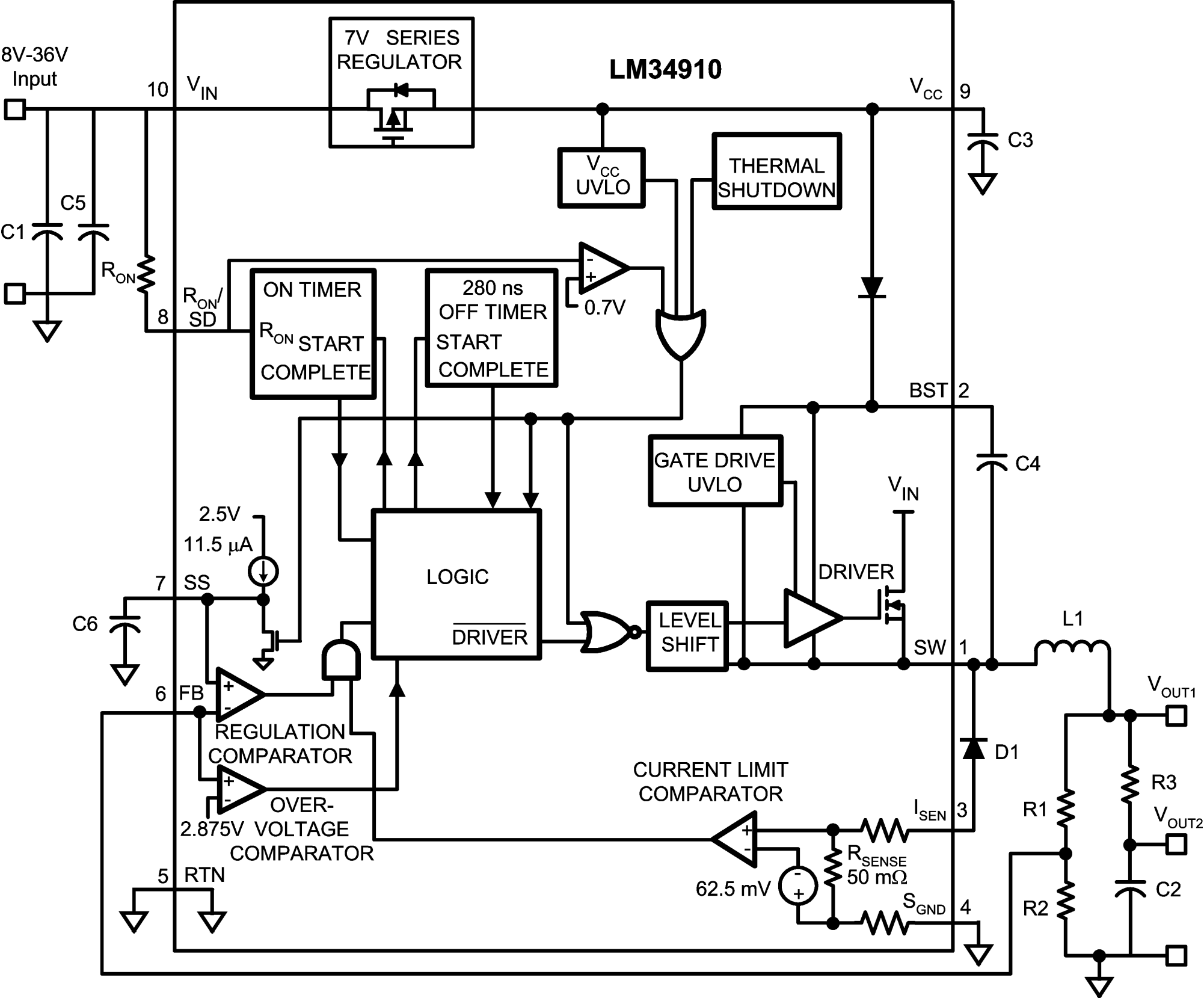
LM34910
8V-36V
Input
10
VIN
7V SERIES
REGULATOR
VCC
9
C3
VCC
UVLO
THERMAL
SHUTDOWN
C5
C1
RON
8
RON/
SD
ON TIMER
RON START
COMPLETE
280 ns
OFF TIMER
START
COMPLETE
0.7V
BST
2
C4
GATE DRIVE
UVLO
VIN
2.5V
11.5 µA
7
SS
C6
LOGIC
DRIVER
LEVEL
SHIFT
DRIVER
SW
1
L1
6
FB
REGULATION
COMPARATOR
OVER-
VOLTAGE
COMPARATOR
2.875V
D1
CURRENT LIMIT
COMPARATOR
ISEN
3
RSENSE
50 mΩ
62.5 mV
SGND
4
5
RTN
VOUT1
R3
R1
VOUT2
C2
R2