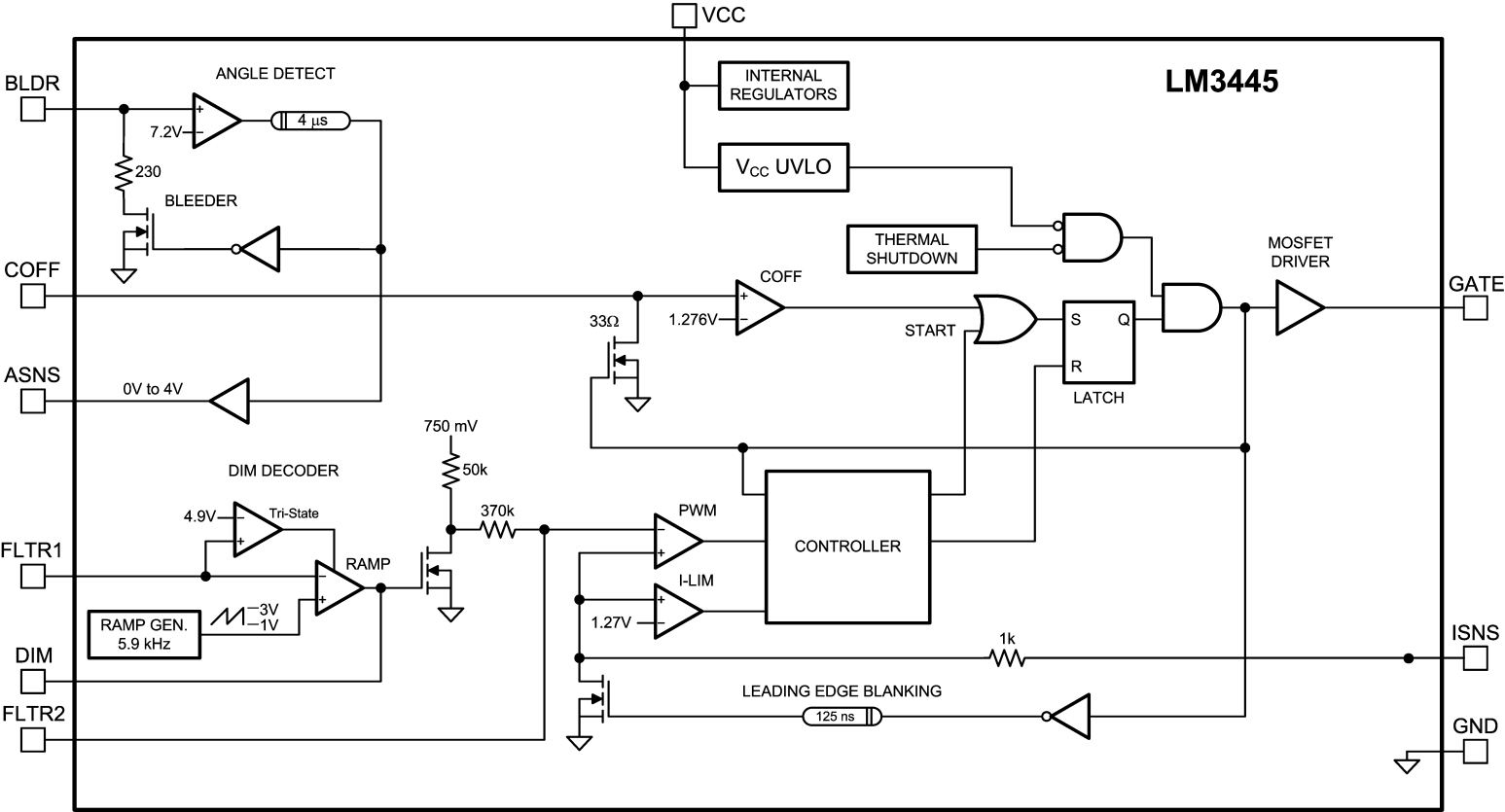
VCC
LM3445
BLDR
ANGLE DETECT
7.2V
4 µs
230
BLEEDER
INTERNAL REGULATORS
VCC UVLO
THERMAL SHUTDOWN
MOSFET DRIVER
GATE
COFF
COFF
33Ω
1.276V
START
S
Q
R
LATCH
ASNS
0V to 4V
750 mV
50k
DIM DECODER
4.9V
Tri-State
370k
PWM
CONTROLLER
FLTR1
RAMP
I-LIM
RAMP GEN.
5.9 kHz
−3V
−1V
1.27V
1k
ISNS
DIM
LEADING EDGE BLANKING
125 ns
FLTR2
GND