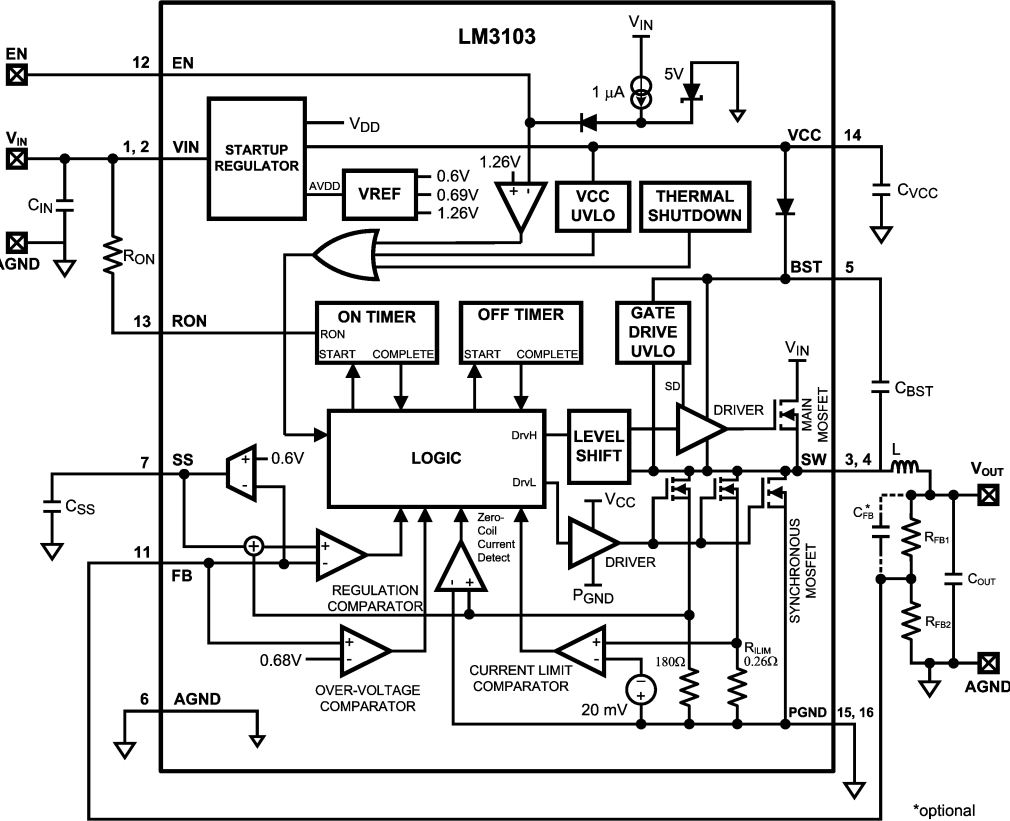
LM3103
EN
12
EN
VIN
1, 2
VIN
CIN
AGND
RON
13
RON
STARTUP REGULATOR
VDD
AVDD
VREF
0.6V
0.69V
1.26V
1.26V
VIN
1 µA
5V
VCC UVLO
THERMAL SHUTDOWN
VCC
14
CVCC
BST
5
CBST
ON TIMER
RON
START
COMPLETE
OFF TIMER
START
COMPLETE
GATE DRIVE UVLO
SD
DRIVER
VIN
MAIN MOSFET
LOGIC
DrvH
DrvL
LEVEL SHIFT
SW
3, 4
L
VOUT
7
SS
0.6V
CSS
11
FB
REGULATION COMPARATOR
Zero-Coil Current Detect
VCC
DRIVER
PGND
SYNCHRONOUS MOSFET
CFB*
RFB1
COUT
RFB2
AGND
0.68V
OVER-VOLTAGE COMPARATOR
CURRENT LIMIT COMPARATOR
180Ω
RILIM 0.26Ω
20 mV
PGND
15, 16
6
AGND
*optional