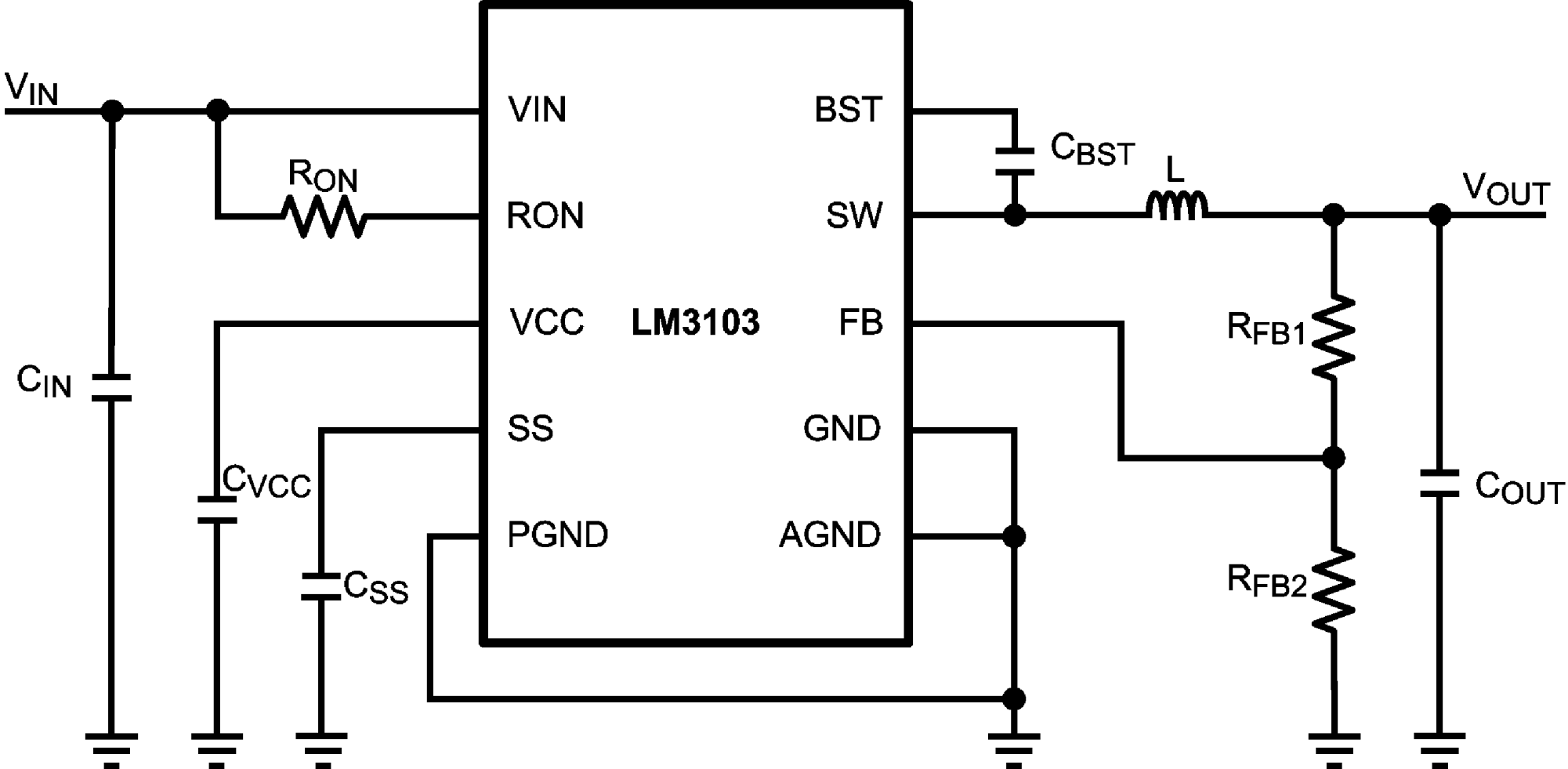
VIN
VIN
BST
CBST
L
VOUT
RON
RON
SW
VCC
LM3103
FB
RFB1
CIN
SS
GND
CVCC
COUT
PGND
AGND
CSS
RFB2