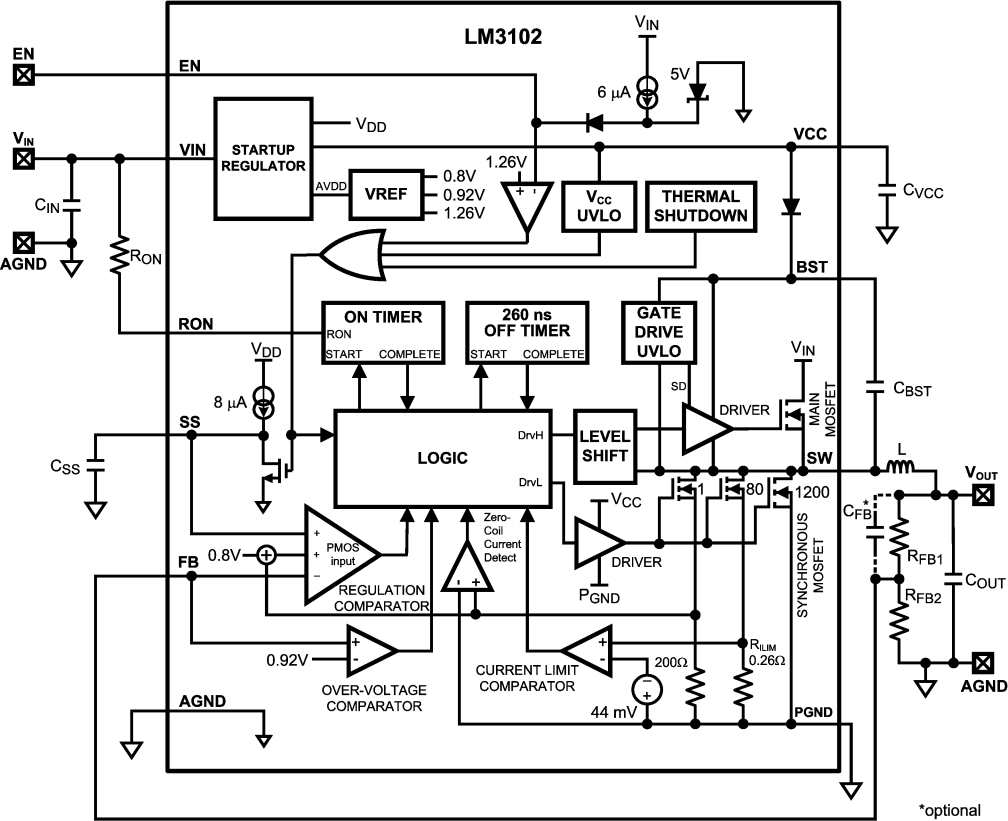
LM3102
EN
VIN
AGND
CIN
RON
STARTUP REGULATOR
VDD
AVDD
VREF
0.8V
0.92V
1.26V
1.26V
VCC UVLO
THERMAL SHUTDOWN
6 µA
5V
VCC
CVCC
BST
ON TIMER
RON
START
COMPLETE
260 ns OFF TIMER
START
COMPLETE
GATE DRIVE UVLO
SD
DRIVER
MAIN MOSFET
CBST
8 µA
SS
CSS
LOGIC
DrvH
DrvL
LEVEL SHIFT
SW
L
VOUT
CFB*
RFB1
RFB2
COUT
1
80
1200
SYNCHRONOUS MOSFET
VCC
DRIVER
PGND
FB
0.8V
PMOS input
REGULATION COMPARATOR
Zero-Coil Current Detect
0.92V
OVER-VOLTAGE COMPARATOR
CURRENT LIMIT COMPARATOR
200Ω
44 mV
RILIM
0.26Ω
PGND
AGND
*optional