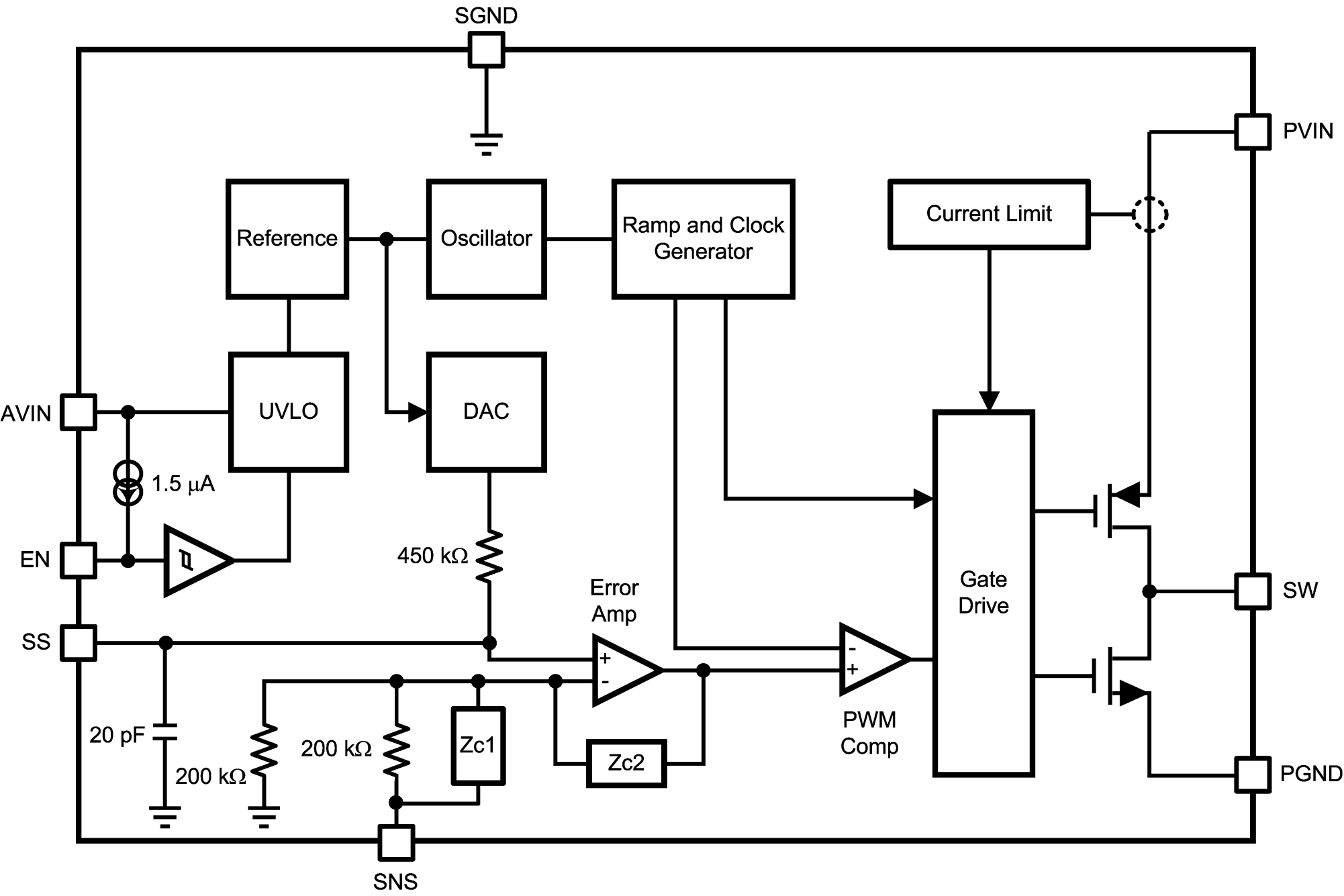
SGND
PVIN
Reference
Oscillator
Ramp and Clock Generator
Current Limit
AVIN
UVLO
DAC
1.5 µA
EN
450 kΩ
Error Amp
Gate Drive
SW
SS
PWM Comp
20 pF
200 kΩ
200 kΩ
Zc1
Zc2
PGND
SNS