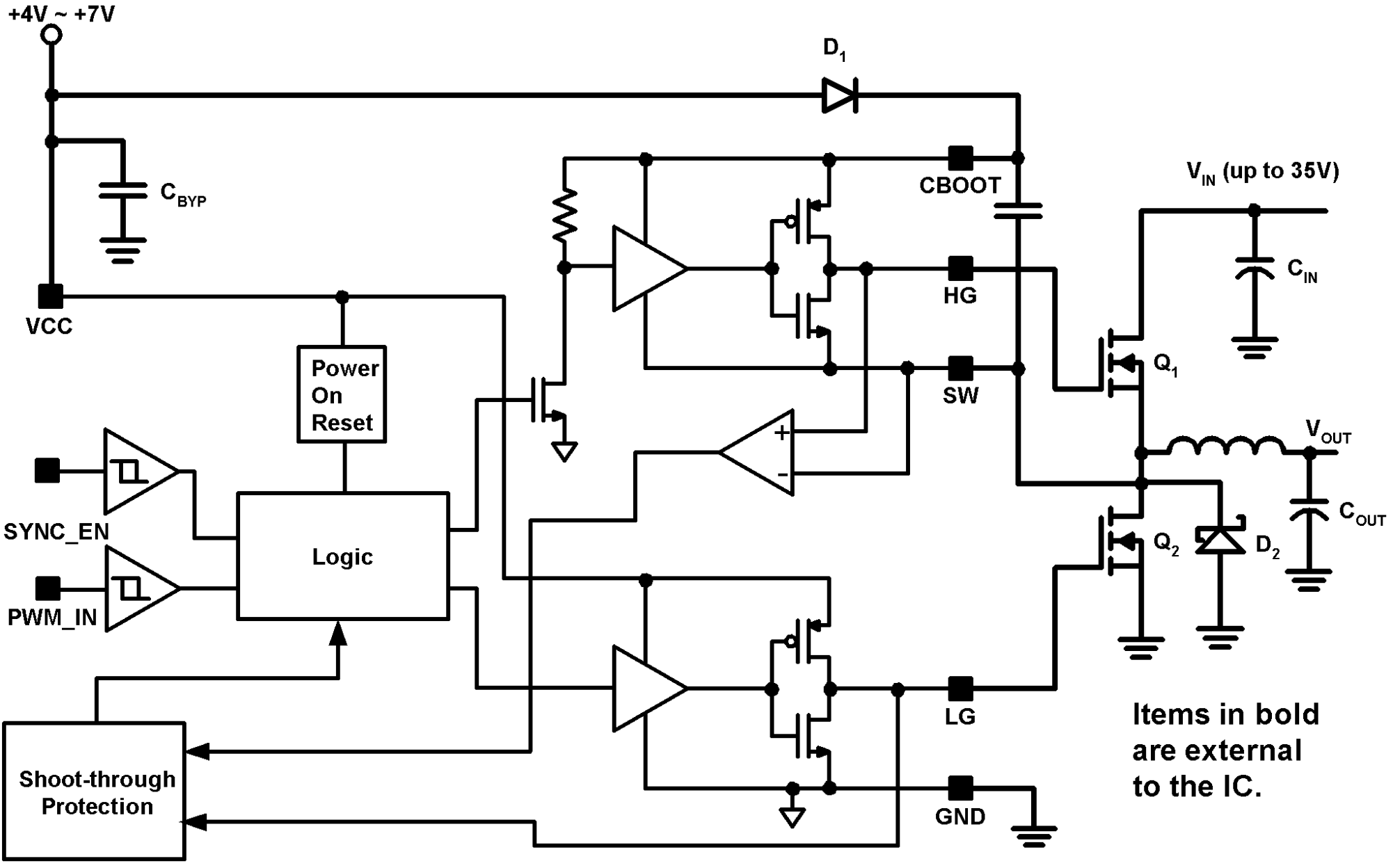
+4V ~ +7V
D1
CBYP
CBOOT
VIN (up to 35V)
CIN
VCC
HG
Q1
SW
Power On Reset
VOUT
SYNC_EN
Logic
COUT
Q2
D2
PWM_IN
LG
Shoot-through Protection
GND
Items in bold are external to the IC.