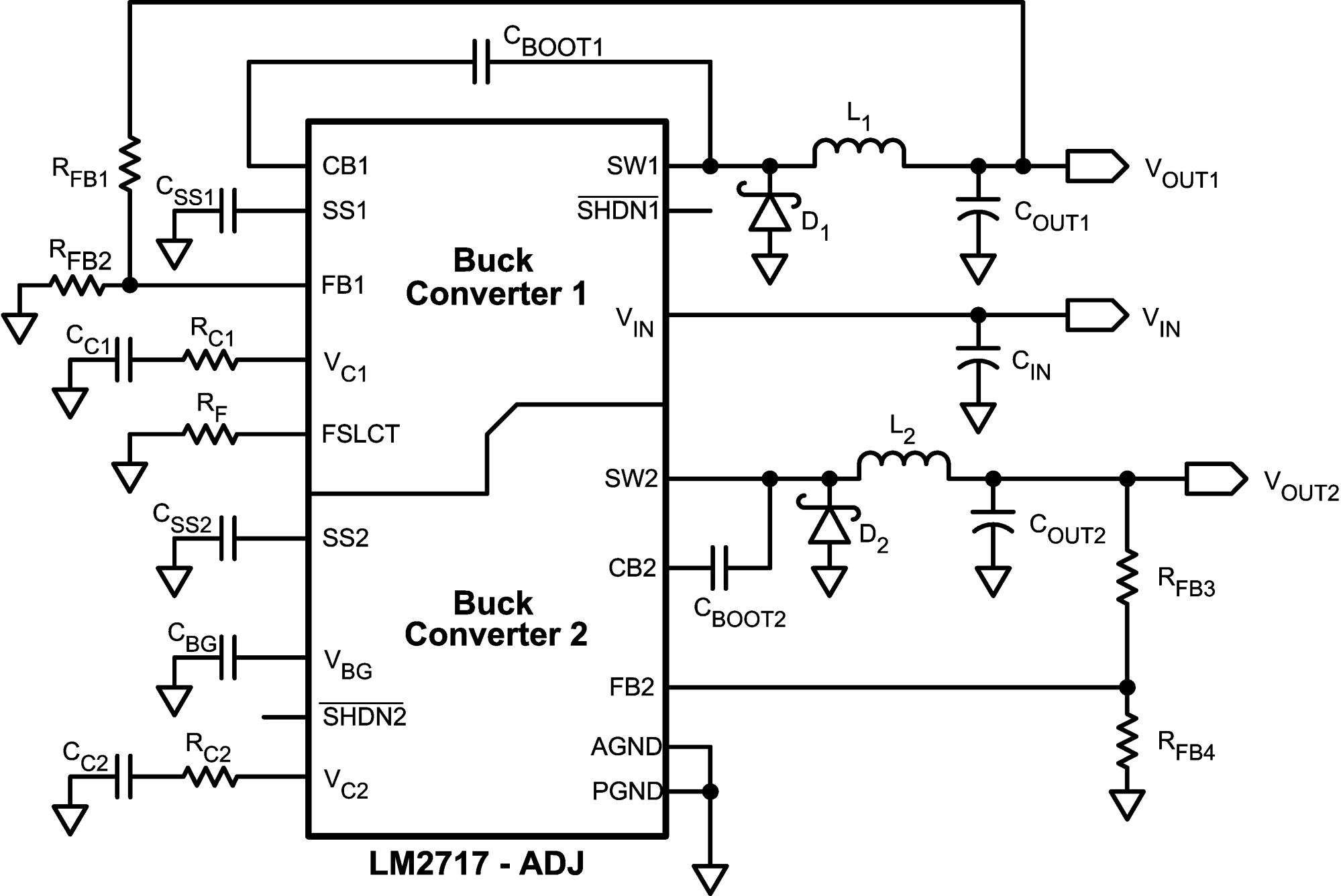
CBOOT1
L1
RFB1
CSS1
CB1
SS1
SW1
SHDN1
D1
COUT1
VOUT1
RFB2
FB1
Buck
Converter 1
VIN
VIN
CC1
RC1
VC1
CIN
RF
FSLCT
L2
SW2
VOUT2
CSS2
SS2
D2
COUT2
CB2
RFB3
CBOOT2
Buck
Converter 2
CBG
VBG
FB2
SHDN2
RFB4
CC2
RC2
AGND
VC2
PGND
LM2717 - ADJ