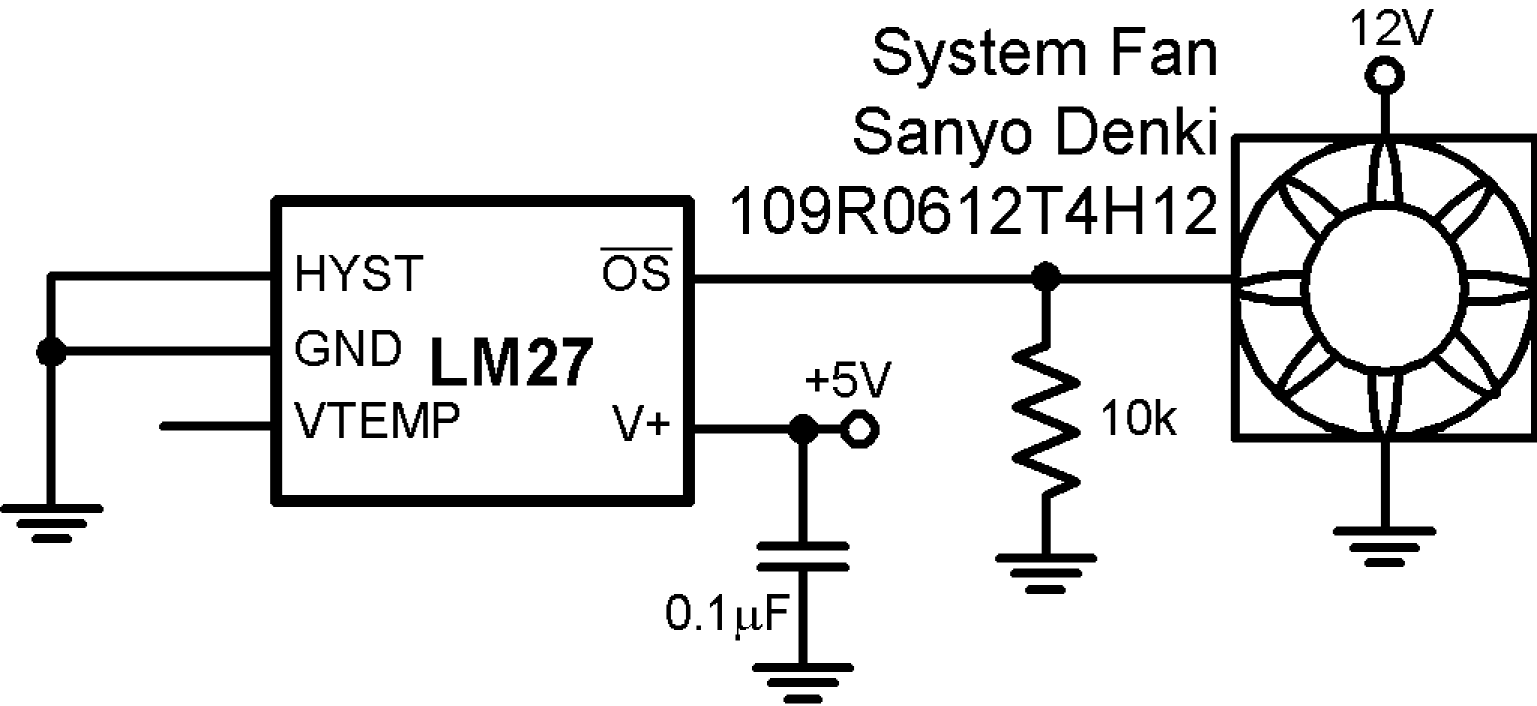
System Fan
Sanyo Denki
109R0612T4H12
12V
HYST
GND
VTEMP
LM27
OS
V+
+5V
10k
0.1µF