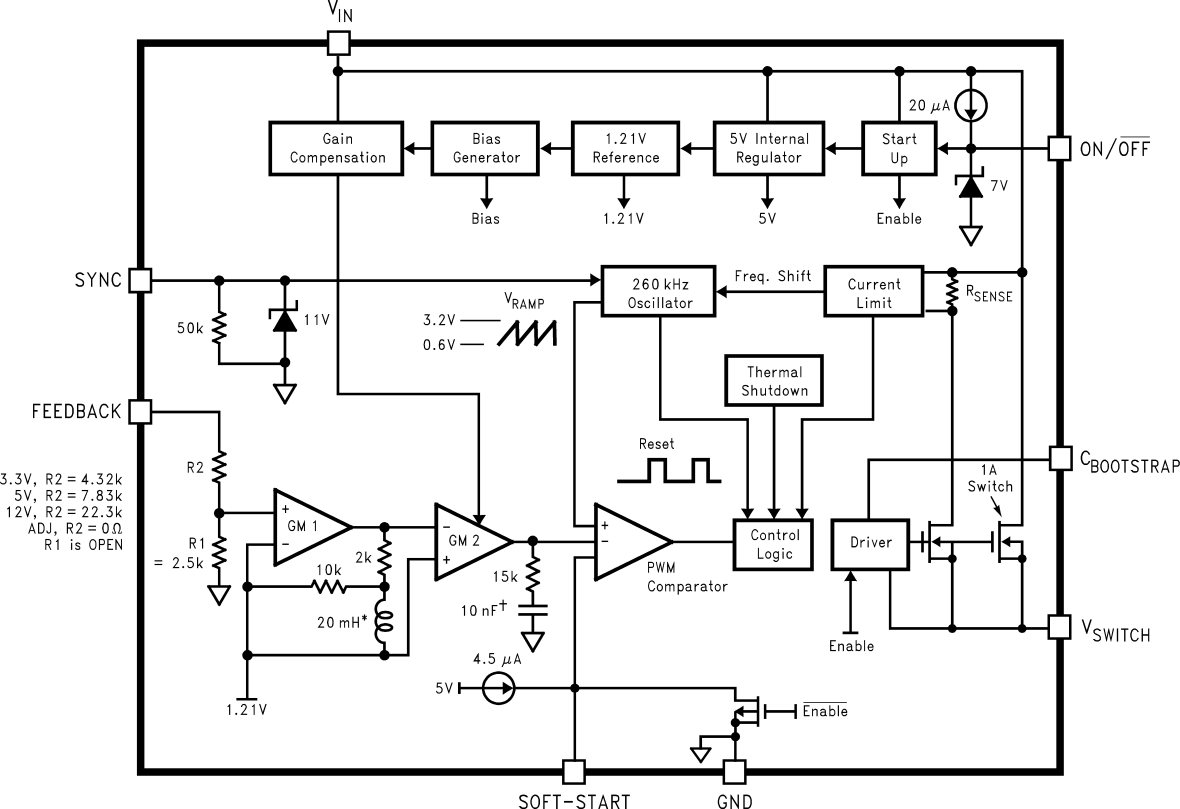
VIN
Gain Compensation
Bias Generator
1.21V Reference
5V Internal Regulator
Start Up
20 μA
ON/OFF
7V
Bias
1.21V
5V
Enable
SYNC
50k
11V
260 kHz Oscillator
Freq. Shift
Current Limit
RSENSE
VRAMP
3.2V
0.6V
Thermal Shutdown
FEEDBACK
Reset
CBOOTSTRAP
1A Switch
R2
3.3V, R2 = 4.32k
5V, R2 = 7.83k
12V, R2 = 22.3k
ADJ, R2 = 0Ω
R1 is OPEN
R1 = 2.5k
GM 1
GM 2
2k
10k
20 mH*
15k
10 nF†
PWM Comparator
Control Logic
Driver
Enable
VSWITCH
4.5 μA
5V
1.21V
Enable
SOFT-START
GND