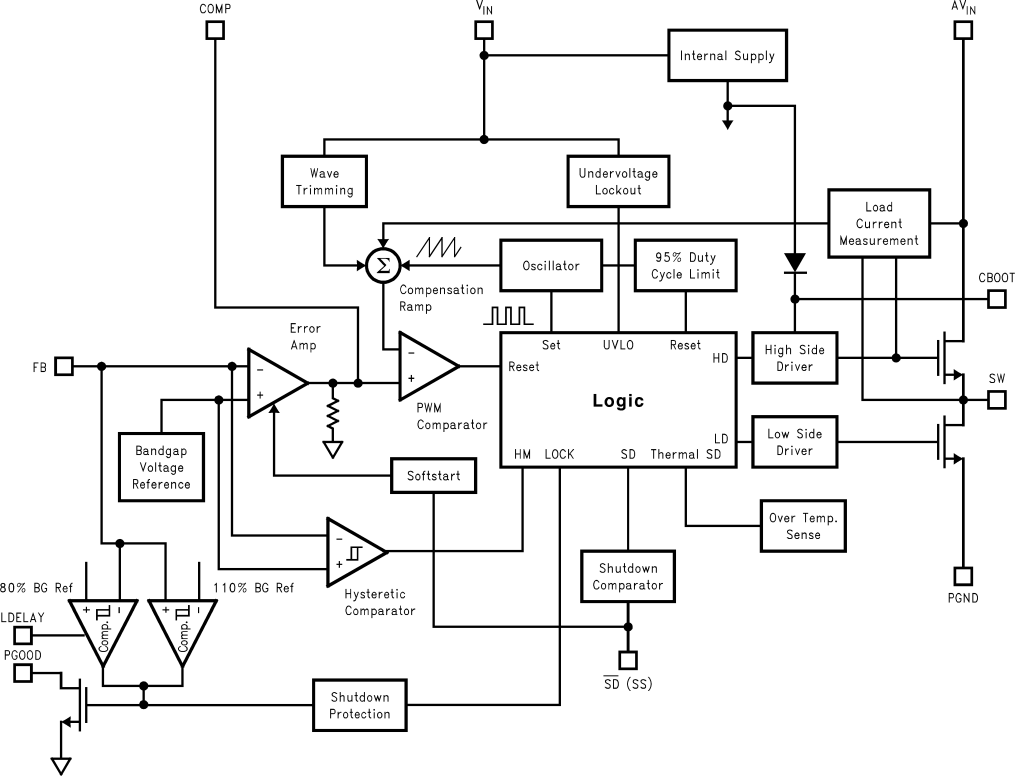
COMP
VIN
AVIN
Internal Supply
Wave Trimming
Undervoltage Lockout
Load Current Measurement
Oscillator
95% Duty Cycle Limit
Compensation Ramp
CBOOT
Error Amp
FB
Set
UVLO
Reset
Reset
HD
High Side Driver
SW
PWM Comparator
Logic
LD
Low Side Driver
Bandgap Voltage Reference
Softstart
HM
LOCK
SD
Thermal SD
Over Temp. Sense
Hysteretic Comparator
Shutdown Comparator
80% BG Ref
110% BG Ref
LDELAY
PGOOD
Comp.
Comp.
PGND
SD (SS)
Shutdown Protection