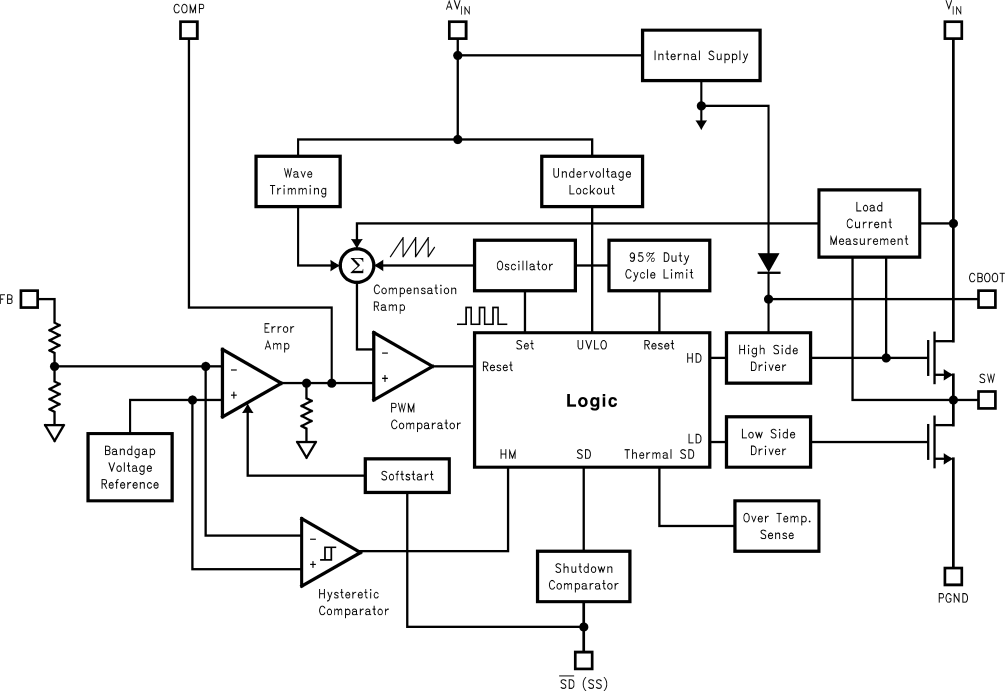
COMP
AVIN
VIN
Internal Supply
Wave Trimming
Undervoltage Lockout
Load Current Measurement
Oscillator
95% Duty Cycle Limit
Compensation Ramp
FB
CBOOT
Error Amp
Set
UVLO
Reset
Reset
HD
High Side Driver
SW
PWM Comparator
Logic
LD
Low Side Driver
Bandgap Voltage Reference
HM
SD
Thermal SD
Softstart
Over Temp. Sense
Hysteretic Comparator
Shutdown Comparator
PGND
SD (SS)