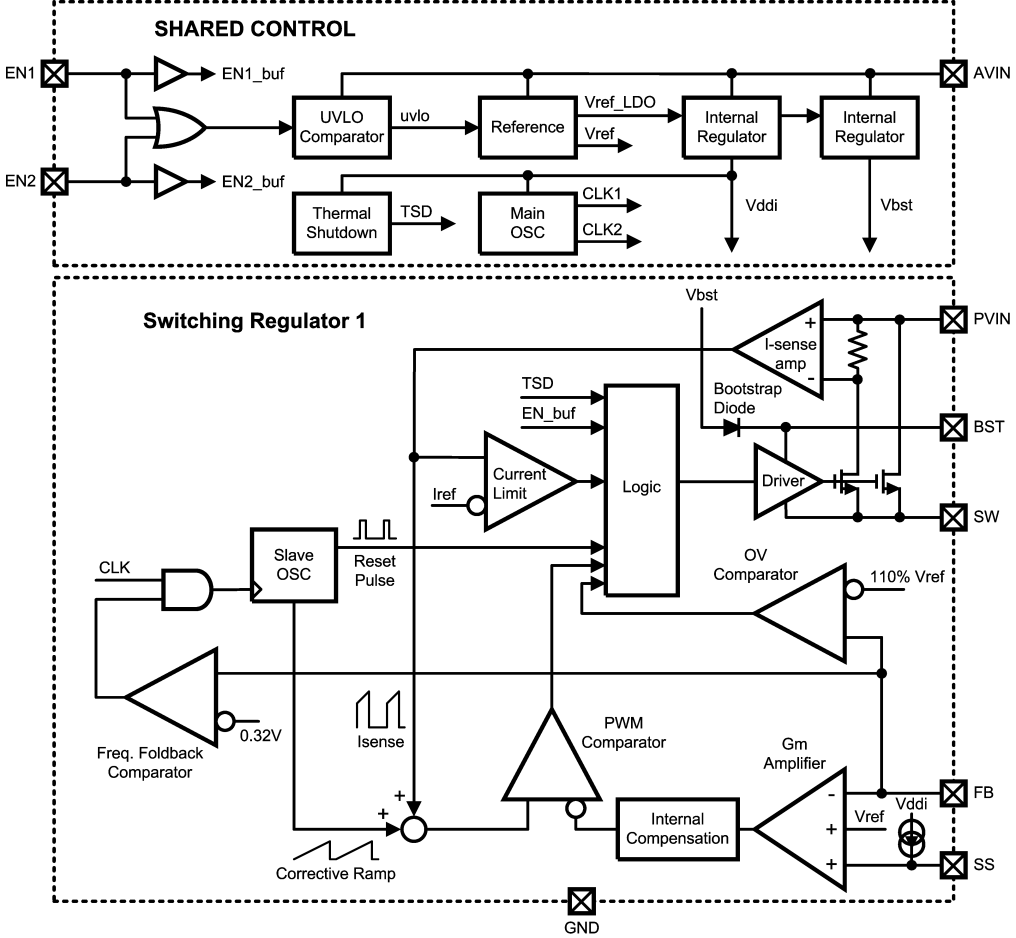
SHARED CONTROL
EN1
EN1_buf
EN2
EN2_buf
UVLO Comparator
uvlo
Reference
Vref_LDO
Vref
Internal Regulator
Internal Regulator
AVIN
Thermal Shutdown
TSD
Main OSC
CLK1
CLK2
Vddi
Vbst
Switching Regulator 1
Vbst
PVIN
I-sense amp
Bootstrap Diode
BST
TSD
EN_buf
Current Limit
Iref
Logic
Driver
SW
CLK
Slave OSC
Reset Pulse
OV Comparator
110% Vref
Freq. Foldback Comparator
0.32V
Isense
PWM Comparator
Gm Amplifier
FB
Vref
Vddi
Internal Compensation
SS
Corrective Ramp
GND