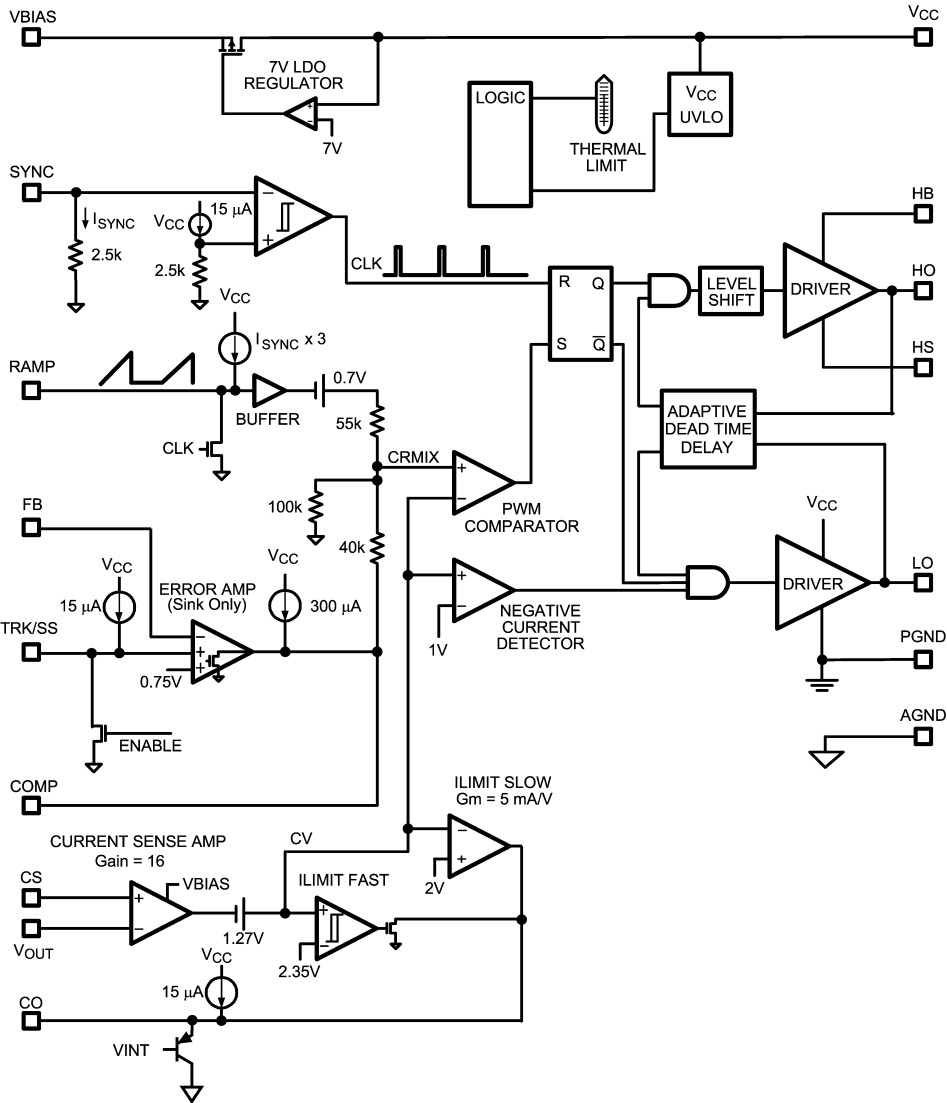
VBIAS
VCC
7V LDO
REGULATOR
7V
LOGIC
THERMAL
LIMIT
VCC
UVLO
SYNC
ISYNC
2.5k
VCC
15 µA
2.5k
CLK
HB
HO
HS
R
Q
S
Q̄
LEVEL
SHIFT
DRIVER
VCC
ISYNC x 3
RAMP
BUFFER
0.7V
55k
CLK
CRMIX
ADAPTIVE
DEAD TIME
DELAY
100k
PWM
COMPARATOR
FB
VCC
VCC
40k
VCC
LO
DRIVER
15 µA
ERROR AMP
(Sink Only)
300 µA
NEGATIVE
CURRENT
DETECTOR
1V
TRK/SS
0.75V
PGND
ENABLE
AGND
COMP
ILIMIT SLOW
Gm = 5 mA/V
CURRENT SENSE AMP
Gain = 16
CV
CS
VBIAS
ILIMIT FAST
2V
1.27V
VOUT
2.35V
VCC
15 µA
CO
VINT