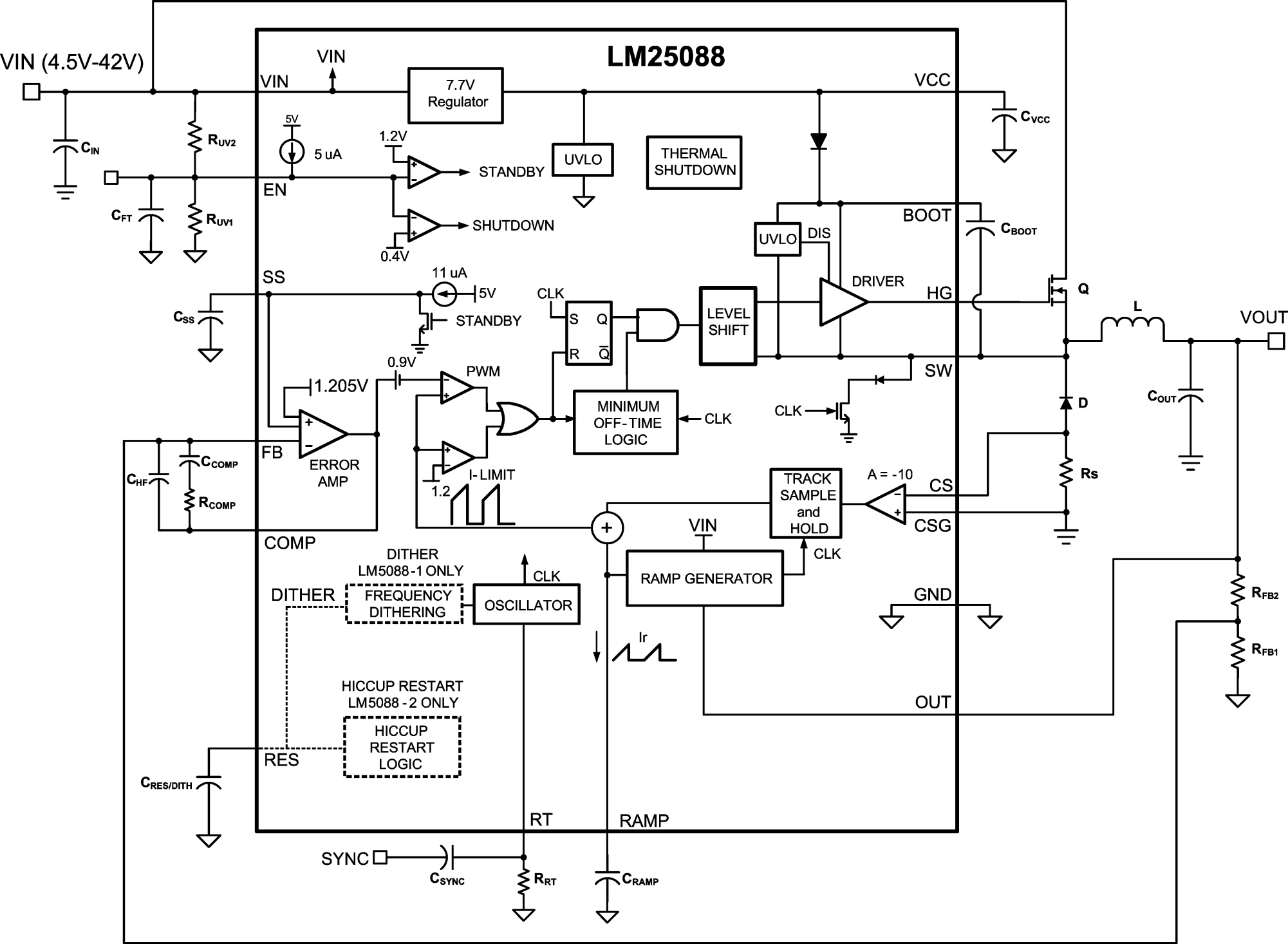
LM25088
VIN (4.5V-42V)
VIN
7.7V Regulator
VCC
CVCC
CIN
RUV2
5V
5 uA
1.2V
STANDBY
UVLO
THERMAL SHUTDOWN
EN
CFT
RUV1
SHUTDOWN
0.4V
BOOT
CBOOT
UVLO
DIS
DRIVER
HG
Q
SS
11 uA
5V
CLK
S
Q
R
Q̄
LEVEL SHIFT
L
VOUT
CSS
STANDBY
0.9V
PWM
SW
1.205V
MINIMUM OFF-TIME LOGIC
CLK
CLK
D
COUT
FB
ERROR AMP
CHF
CCOMP
RCOMP
I-LIMIT
1.2
TRACK SAMPLE and HOLD
A = -10
CS
Rs
CSG
COMP
VIN
CLK
DITHER LM5088-1 ONLY
DITHER
FREQUENCY DITHERING
OSCILLATOR
CLK
RAMP GENERATOR
GND
RFB2
Ir
RFB1
HICCUP RESTART LM5088 - 2 ONLY
HICCUP RESTART LOGIC
OUT
RES
CRES/DITH
RT
RAMP
SYNC
CSYNC
RRT
CRAMP