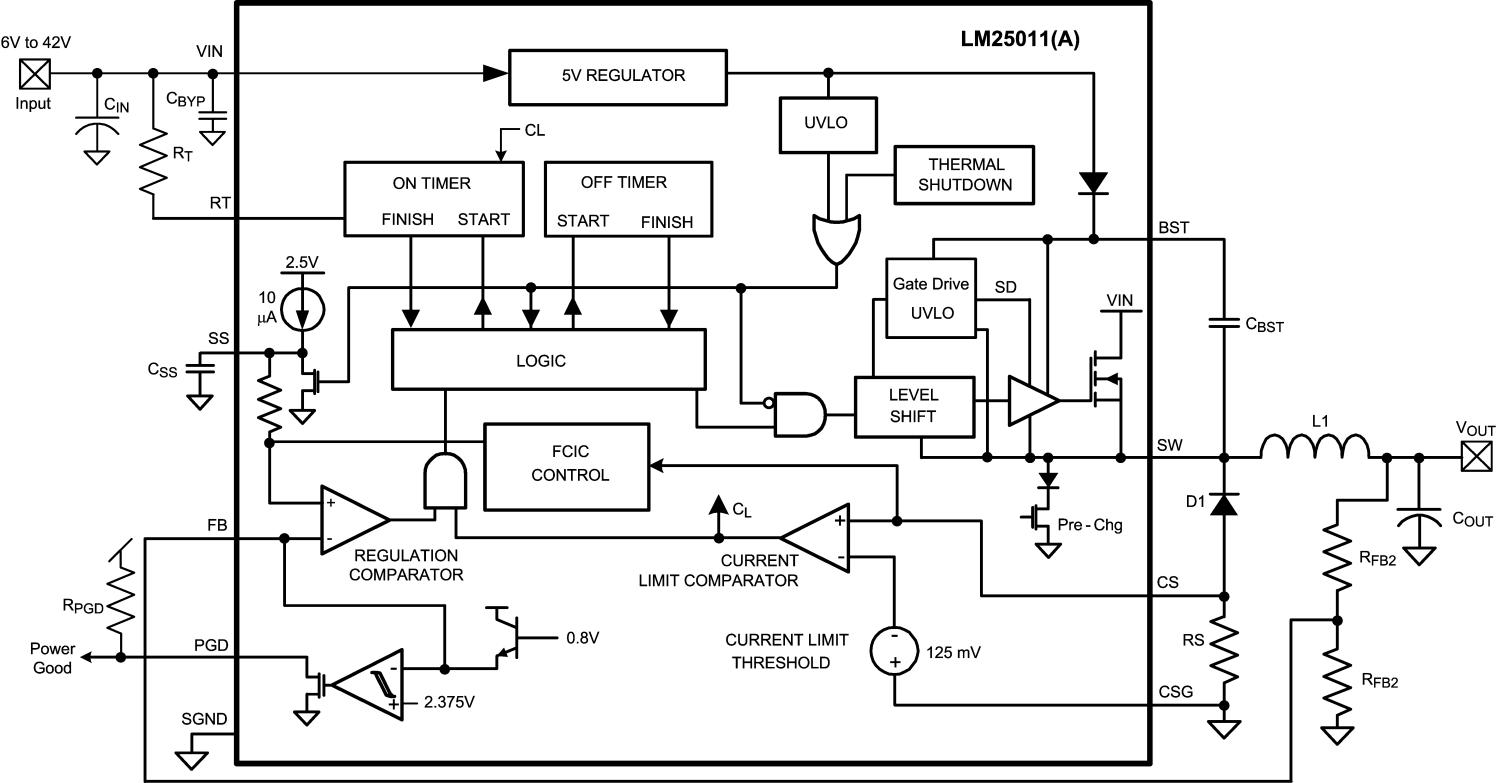
LM25011(A)
6V to 42V
Input
VIN
CIN
CBYP
RT
RT
5V REGULATOR
UVLO
THERMAL SHUTDOWN
CL
ON TIMER
FINISH
START
OFF TIMER
START
FINISH
2.5V
10 µA
SS
CSS
LOGIC
Gate Drive UVLO
SD
VIN
LEVEL SHIFT
BST
CBST
SW
L1
VOUT
FCIC CONTROL
FB
REGULATION COMPARATOR
CL
CURRENT LIMIT COMPARATOR
Pre - Chg
D1
COUT
RFB2
CS
RPGD
Power Good
PGD
0.8V
CURRENT LIMIT THRESHOLD
125 mV
RS
RFB2
2.375V
CSG
SGND