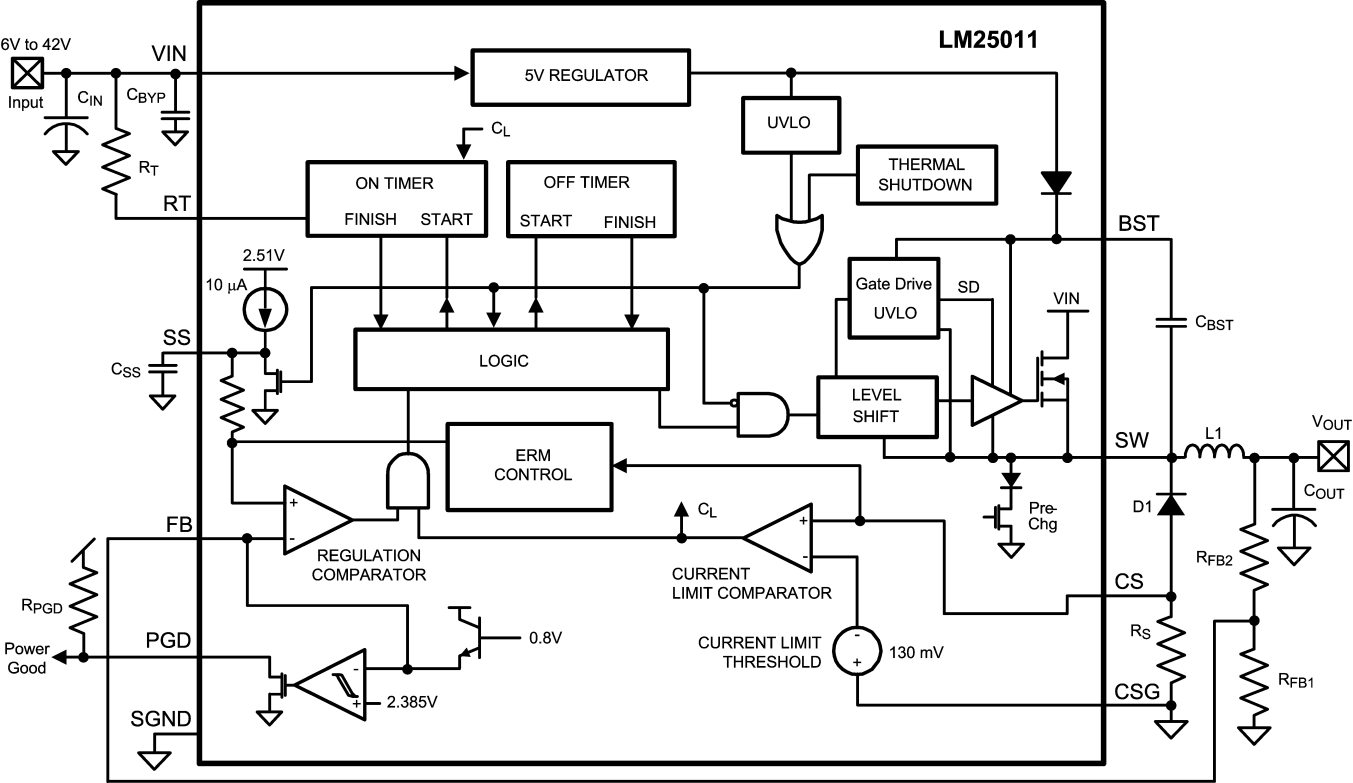
LM25011
6V to 42V
Input
VIN
CIN
CBYP
RT
5V REGULATOR
UVLO
THERMAL SHUTDOWN
CL
ON TIMER
FINISH
START
OFF TIMER
START
FINISH
BST
2.51V
10 µA
SS
CSS
LOGIC
Gate Drive UVLO
SD
VIN
CBST
LEVEL SHIFT
ERM CONTROL
SW
L1
VOUT
COUT
Pre-Chg
D1
FB
REGULATION COMPARATOR
CL
CURRENT LIMIT COMPARATOR
RFB2
CS
RPGD
Power Good
PGD
0.8V
CURRENT LIMIT THRESHOLD
130 mV
RS
RFB1
2.385V
CSG
SGND