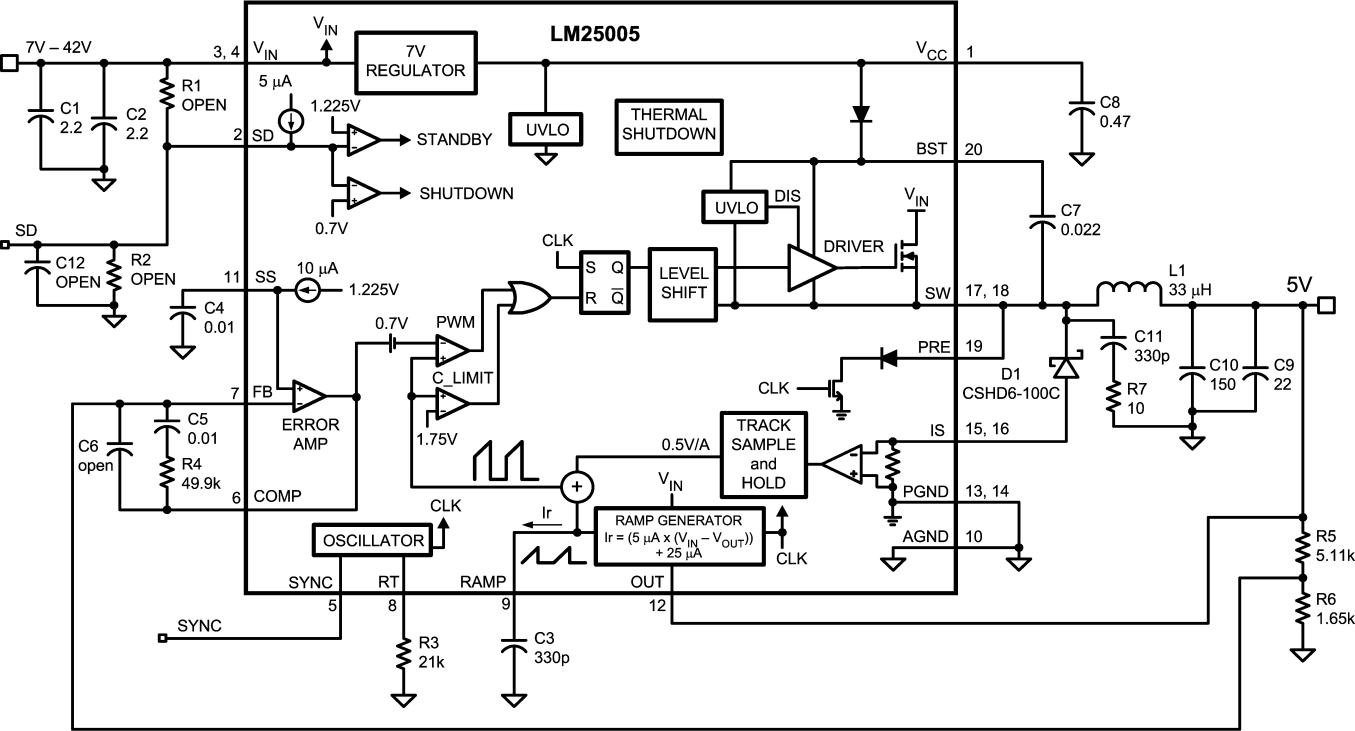
LM25005
7V – 42V
3, 4
VIN
VIN
7V REGULATOR
VCC
1
C1 2.2
C2 2.2
R1 OPEN
5 µA
1.225V
2
SD
STANDBY
UVLO
THERMAL SHUTDOWN
C8 0.47
BST
20
SHUTDOWN
0.7V
UVLO
DIS
VIN
C7 0.022
SD
C12 OPEN
R2 OPEN
CLK
S
Q
R
Q
LEVEL SHIFT
DRIVER
11
SS
10 µA
1.225V
C4 0.01
SW
17, 18
L1 33 µH
5V
0.7V
PWM
PRE
19
C11 330p
C10 150
C9 22
7
FB
C_LIMIT
CLK
D1 CSHD6-100C
R7 10
ERROR AMP
1.75V
IS
15, 16
C5 0.01
C6 open
R4 49.9k
0.5V/A
TRACK SAMPLE and HOLD
6
COMP
VIN
PGND
13, 14
CLK
Ir
RAMP GENERATOR
Ir = (5 µA x (VIN – VOUT)) + 25 µA
CLK
AGND
10
OSCILLATOR
R5 5.11k
SYNC
RT
RAMP
OUT
5
8
9
12
R6 1.65k
SYNC
R3 21k
C3 330p