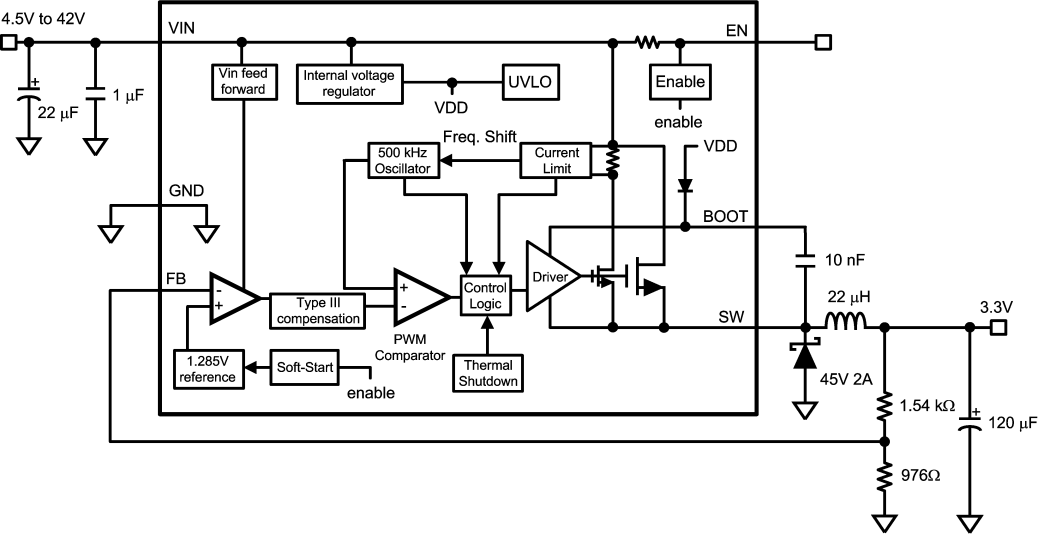
4.5V to 42V
VIN
EN
22 µF
1 µF
Vin feed forward
Internal voltage regulator
UVLO
VDD
Enable
enable
Freq. Shift
500 kHz Oscillator
Current Limit
VDD
GND
BOOT
FB
Type III compensation
Control Logic
Driver
10 nF
22 µH
3.3V
SW
PWM Comparator
1.285V reference
Soft-Start
enable
Thermal Shutdown
45V 2A
1.54 kΩ
120 µF
976Ω