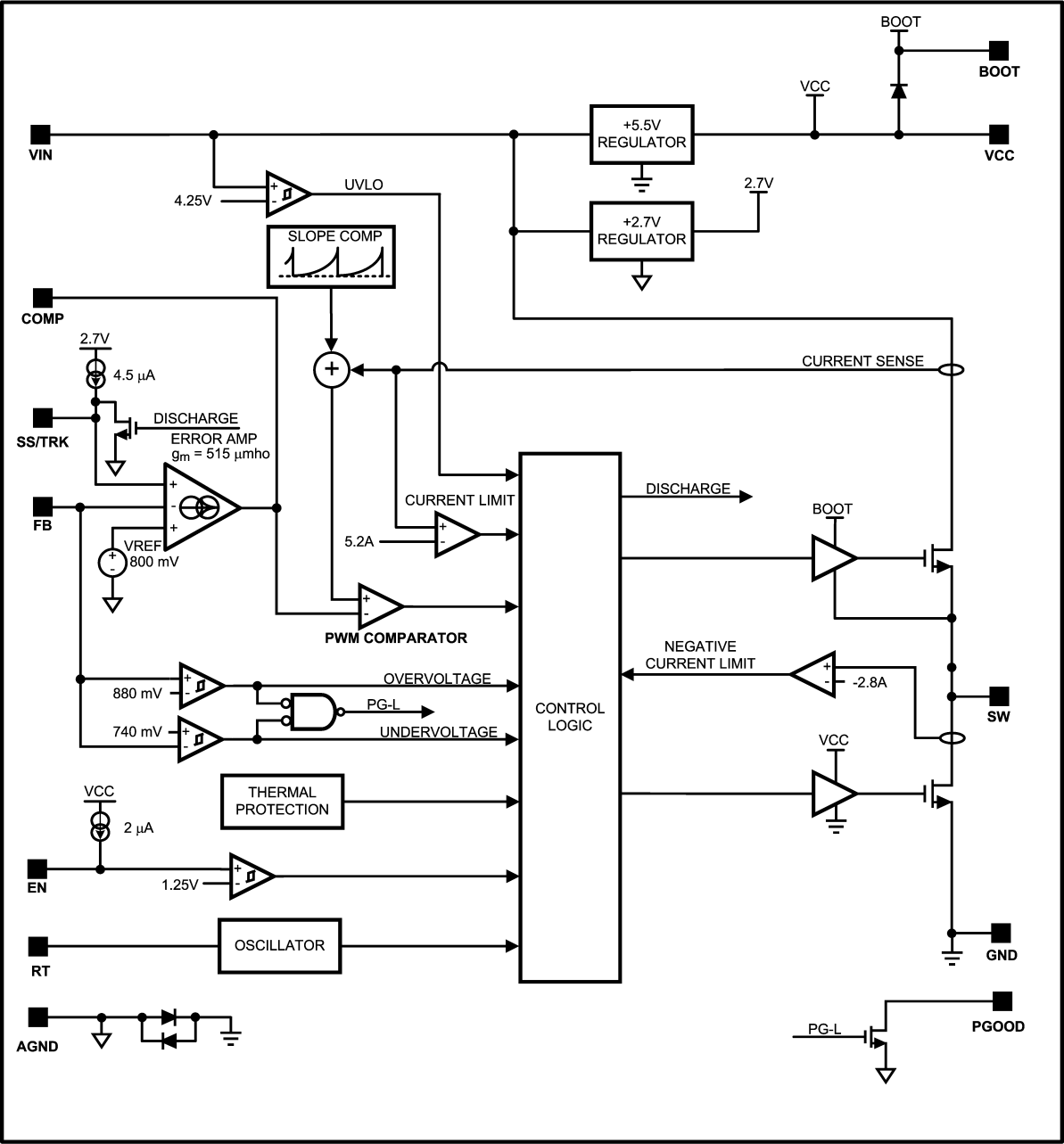
BOOT
BOOT
VCC
VIN
+5.5V REGULATOR
VCC
4.25V
UVLO
2.7V
+2.7V REGULATOR
SLOPE COMP
COMP
2.7V
4.5 µA
CURRENT SENSE
SS/TRK
DISCHARGE
ERROR AMP
gm = 515 µmho
FB
CURRENT LIMIT
DISCHARGE
BOOT
VREF
800 mV
5.2A
PWM COMPARATOR
NEGATIVE CURRENT LIMIT
-2.8A
OVERVOLTAGE
880 mV
PG-L
740 mV
UNDERVOLTAGE
CONTROL LOGIC
SW
VCC
THERMAL PROTECTION
VCC
2 µA
EN
1.25V
RT
OSCILLATOR
GND
AGND
PG-L
PGOOD