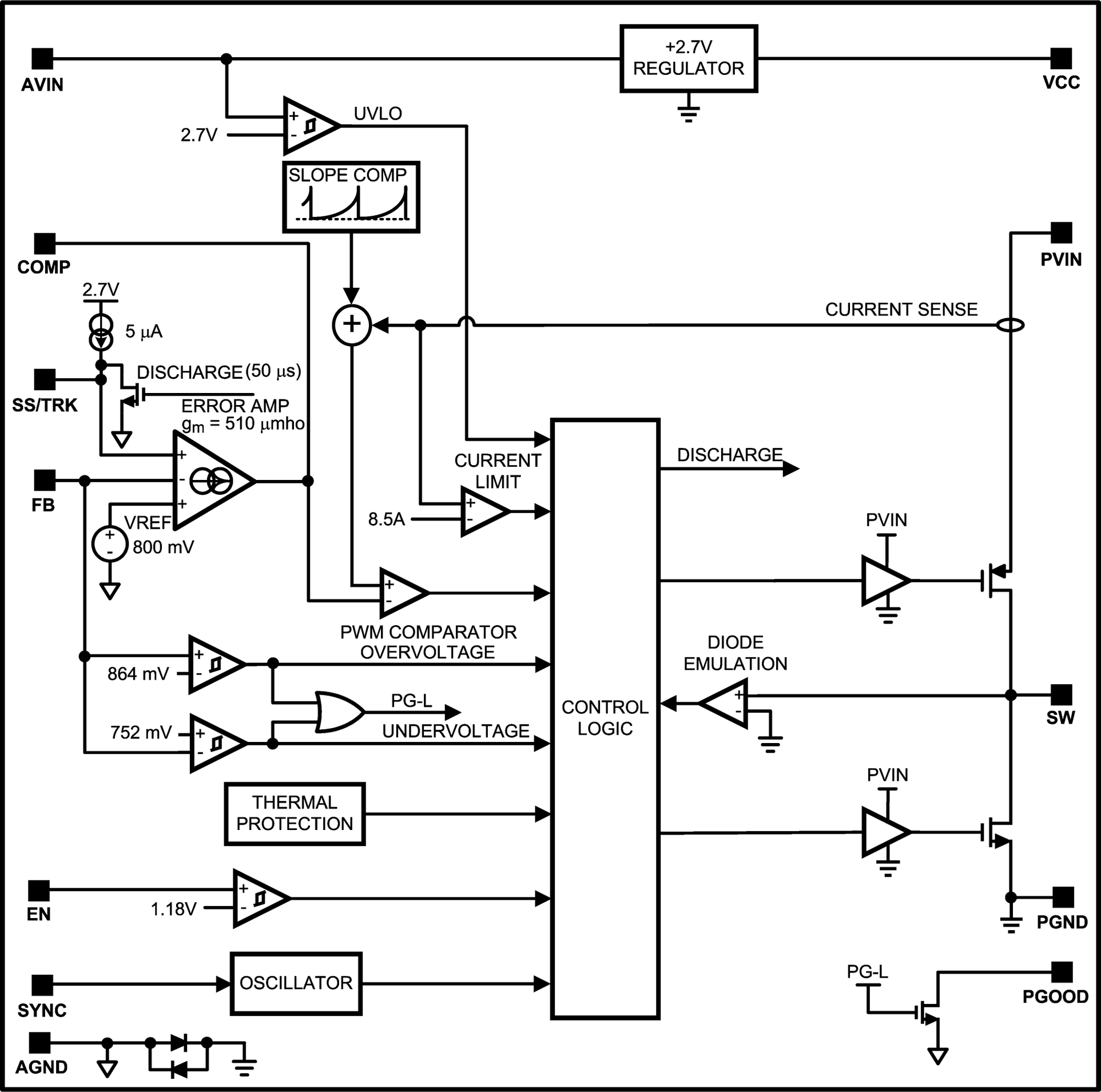
AVIN
+2.7V
REGULATOR
VCC
2.7V
UVLO
SLOPE COMP
COMP
PVIN
2.7V
5 µA
CURRENT SENSE
DISCHARGE (50 µs)
SS/TRK
ERROR AMP
gm = 510 µmho
FB
CURRENT
LIMIT
DISCHARGE
8.5A
VREF
800 mV
PVIN
PWM COMPARATOR
OVERVOLTAGE
DIODE
EMULATION
864 mV
PG-L
CONTROL
LOGIC
SW
752 mV
UNDERVOLTAGE
PVIN
THERMAL
PROTECTION
EN
1.18V
PGND
PG-L
PGOOD
SYNC
OSCILLATOR
AGND